STUDIO TECNICO DI INGEGNERIA DOTT.ING.DAVIDE BARILLI
Via Zara civ.9 int.2 - 16145 - GENOVA – Tel.010532074 – Fax.0108688940
E-MAIL: info@ingbarilli.eu – P.E.C.: davide.barilli@ingpec.eu – WEB: www.ingbarilli.eu
Cod.Fisc. BRL DVD 66H19 D969 S - P.I.V.A.03427070101

VERIFICA DEL BASAMENTO DEL SERBATOIO DI AZOTO PRESSO IL PAD.5 DI IRCSS – OSPEDALE SAN MARTINO - (GE)

RELAZIONE DEI MATERIALI E TECNICA DI CALCOLO

(ai sensi del D.M.14/02/2008 e Circ.n°617 del 02/02/2009)

Progettista
Dott. Ing.
Ing. Davide Barilli

ORDINE DEGLI INGEGNERI DELLA PROVINCIA DI GENOVA
Dott. Ing. DAVIDE BARILLI N° 6684

INDICE

01. Premessa 3
02. Normativa di riferimento 3
03. Caratteristiche dei materiali 5
03.1 Calcestruzzo 5
Materiali e copriferri per strutture in cls.a. 5
Durabilità 6
03.2 Acciaio in profilati 8
04. Valutazioni sulla vita dell'opera strutturale 9
Parametri della struttura 9
05. Analisi dei carichi gravanti sul nuovo solaio 9
05.1 Carico permanente 9
05.2 Carico variabile 9
05.3 Carico variabile - Neve 9
05.4 Carico variabile - Vento 10
06. Azione sismica 10
Parametri della struttura 11
07. Validazione della modellazione 12
07.1 Criteri di analisi della sicurezza e metodi di analisi strutturale 12
08. Verifica del sistema di supporto del serbatoio 13
MODELLAZIONE DELLE SEZIONI 14
MODELLAZIONE STRUTTURA: NODI 15
TABELLA DATI NODI 16
MODELLAZIONE STRUTTURA: ELEMENTI TRAVE 17
MODELLAZIONE STRUTTURA: ELEMENTI SHELL 19
MODELLAZIONE DELLE AZIONI 23
SCHEMATIZZAZIONE DEI CASI DI CARICO 25
DEFINIZIONE DELLE COMBINAZIONI 27
AZIONE SISMICA 29
Parametri della struttura 29
RISULTATI ANALISI SISMICHE 30
RISULTATI NODALI 38
RISULTATI OPERE DI FONDAZIONE 103
Pressione sul terreno 104
RISULTATI ELEMENTI TIPO TRAVE 104
VERIFICHE PER ELEMENTI IN ACCIAIO 109
09. Verifica della piastra di collegamento tra i profili 110
10. Conclusioni 112

01. Premessa

L'intervento prevede la sostituzione del serbatoio di azoto da 3.000 litri con uno da 10.000 litri, presso il padiglione 5 dell'Ospedale San Martino. Detto intervento prevede, viste le minime tempistiche legate al servizio, la possibilità di sostituire il serbatoio e renderlo al più presto operativo. Successivamente verrà realizzata una gettata integrativa atta a garantire la completa stabilità del manufatto.

Con la presente relazione si potrà rilevare che la stabilità del serbatoio sarà già garantita dal telaio da realizzarsi in profilati metallici pre-installati in officina ai piedi del serbatoio, permettendo alla gettata integrativa di assolvere la principale funzione di protezione dagli agenti atmosferici e di appesantimento e quindi contrasto alle pressioni positive rilevabili dal modello, valutato in assenza del getto di completamento, a favore di sicurezza. Il telaio metallico sarà comunque da assicurare al magrone sottostante mediante tassellatura.

La presente relazione di calcolo strutturale risulta pertanto rivolta alla verifica delle strutture di fondazione, in conformità al punto §10.1 del DM 14/01/08, è comprensiva di una descrizione generale dell'opera e dei criteri generali di analisi e verifica. La modellazione del serbatoio ha permesso la valutazione delle massime deformate del manufatto, in funzione della tipologia di fondazione e di vincolo. Segue inoltre le indicazioni fornite al §10.2 del DM stesso per quanto concerne analisi e verifiche svolte con l'ausilio di codici di calcolo.

02. Normativa di riferimento

Con riferimento alla normativa vigente si è fatto riferimento alle Nuove Norme Tecniche per le Costruzioni ed in particolare alle seguenti norme:

D.M. 14 gennaio 2008 – Nuove Norme Tecniche per le Costruzioni

Circ.02 febbraio 2009 n°617 C.S.LL.PP.

Eurocodici approvati dal Comitato Europeo di Normazione in forma di Euro Norma (EN)

Istruzioni CNR 10024/86 Analisi mediante elaboratore: impostazione e redazione delle relazioni di calcolo

individuando il sito di intervento secondo le seguenti coordinate ricavate mediante software e mappatura mediante Google corrispondenti a:

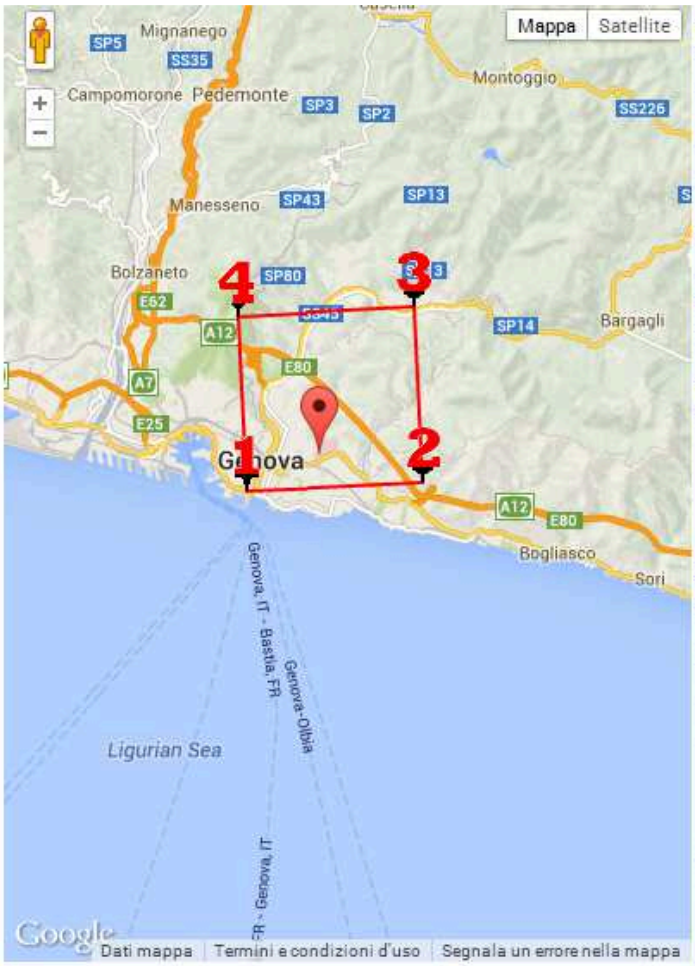

Stato Limite	Tr [anni]	a_g [g]	Fo	Tc* [s]
Operatività (SLO)	120	0,043	2,530	0,257
Danno (SLD)	201	0,053	2,537	0,268
Salvaguardia vita (SLV)	1898	0,119	2,503	0,298
Prevenzione collasso (SLC)	2475	0,130	2,499	0,300
Periodo di riferimento per l'azione sismica:	200			

Calcolo dei coefficienti sismici

○ Muri di sostegno ○ Paratie

◉ Stabilità dei pendii e fondazioni

☐ Muri di sostegno che non sono in grado di subire spostamenti.

H (m)	1
us (m)	0,1
Categoria sottosuolo	B
Categoria topografica	T1

	SLO	SLD	SLV	SLC
Ss * Amplificazione stratigrafica	1,20	1,20	1,20	1,20
Cc * Coeff. funz categoria	1,44	1,43	1,40	1,40
St * Amplificazione topografica	1,00	1,00	1,00	1,00

44.407236, 8.9695110

☑ Visualizza vertici della maglia di appartenenza

(1)* Il software converte i dati dal sistema WGS84 al sistema ED50, prima di elaborare i risultati è comunque possibile inserire direttamente le coordinate nel sistema ED50. I punti sulla mappa sono da considerarsi esclusivamente in coordinate WGS84.
(2)* Il file creato con *"Salva file"* può essere importato automaticamente negli applicativi GeoStru.

☐ Personalizza acc.ne massima attesa al sito [m/s²] 0.6

Coefficienti	SLO	SLD	SLV	SLC
kh	0,010	0,013	0,034	0,038
kv	0,005	0,006	0,017	0,019
Amax [m/s²]	0,511	0,625	1,397	1,532
Beta	0,200	0,200	0,240	0,240

Calcola

* I valori di Ss, Cc ed St possono essere variati.

03. Caratteristiche dei materiali

03.1 Calcestruzzo

Materiali e copriferri per strutture in cls.a.

Classe di esposizione ambientale	Copriferro $c_{min,dur}$ [mm]							
	15	25	30	35	40	45	50	55
XC1		C25/30, 0.60, 300						
XC2				C25/30, 0.60, 300				
XC3				C28/35, 0.55, 320				
XC4					C32/40, 0.50, 340			
XD1						C28/35, 0.55, 320		
XD2							C35/45, 0.45, 360	
XD3								C35/45, 0.45, 360
XS1						C28/35, 0.55, 320		
XS2							C35/45, 0.45, 360	
XS3								C35/45, 0.45, 360
XF1	C28/35, 0,50, 320							
XF2 – XF3	C25/30, 0,50, 340							
XF4	C28/35, 0,45, 360							
XA1	C28/35, 0,55, 320							
XA2	C32/40, 0,50, 340							
XA3	C35/45, 0,45, 360							

50 anni

100 anni

$$c_{nom} = \max(c_{min,b}, c_{min,dur}) + 10 \ (mm) \geq 20 \ mm$$

$c_{min,b} = \phi\sqrt{n_b}$ n_b numero di barre di un eventuale gruppo di barre; per barra singola $n_b = 1$.

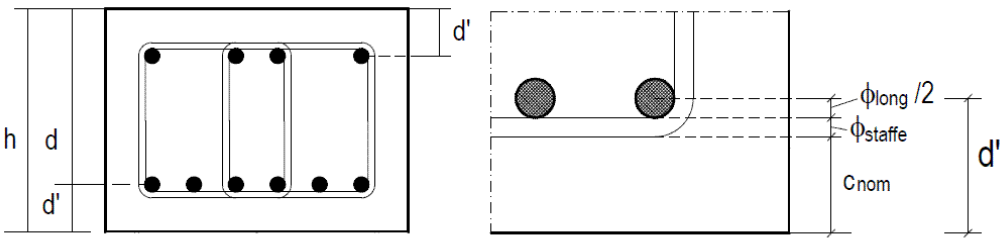

Altezze d e d'

Durabilità

1 Nessun rischio di corrosione o di attacco		
X0	Calcestruzzo privo di armatura o inserti metallici: tutte le esposizioni eccetto dove c'è gelo/disgelo, abrasione o attacco chimico. Calcestruzzo con armatura o inserti metallici molto asciutto.	Calcestruzzo all'interno di edifici con umidità dell'aria molto bassa.
2 Corrosione indotta da carbonatazione		
XC1	Asciutto o permanentemente bagnato	Calcestruzzo all'interno di edifici con bassa umidità relativa. Calcestruzzo costantemente immerso in acqua
XC2	Bagnato, raramente asciutto	Superfici di calcestruzzo a contatto con acqua per lungo tempo. Molte fondazioni
XC3	Umidità moderata	Calcestruzzo all'interno di edifici con umidità dell'aria moderata oppure elevata. Calcestruzzo esposto all'esterno protetto dalla pioggia
XC4	Ciclicamente bagnato e asciutto	Superfici di calcestruzzo soggette al contatto con acqua, non nella classe di esposizione XC2
3 Corrosione indotta da cloruri		
XD1	Umidità moderata	Superfici di calcestruzzo esposte a nebbia salina
XD2	Bagnato, raramente asciutto	Piscine. Calcestruzzo esposto ad acque industriali contenenti cloruri
XD3	Ciclicamente bagnato ed asciutto	Parti di ponti esposte a spruzzi contenenti cloruri Pavimentazioni stradali e di parcheggi
4 Corrosione indotta da cloruri presenti nell'acqua di mare		
XS1	Esposto a nebbia salina ma non in contatto diretto con acqua di mare	Strutture prossime oppure sulla costa
XS2	Permanentemente sommerso	Parti di strutture marine
XS3	Zone esposte alle onde, agli spruzzi oppure alle maree	Parti di strutture marine
5 Attacco di cicli gelo/disgelo		
XF1	Moderata saturazione d'acqua, senza impiego di agente antigelo	Superfici verticali di calcestruzzo esposte alla pioggia e al gelo
XF2	Moderata saturazione d'acqua, con uso di agente antigelo	Superfici verticali di calcestruzzo di strutture stradali esposte al gelo e nebbia di agenti antigelo
XF3	Elevata saturazione d'acqua, senza antigelo	Superfici orizzontali di calcestruzzo esposte alla pioggia e al gelo
XF4	Elevata saturazione d'acqua, con antigelo oppure acqua di mare	Strade e impalcati da ponte esposti agli agenti antigelo Superfici di calcestruzzo esposte direttamente a nebbia contenente agenti antigelo e al gelo
6. Attacco chimico		
XA1	Ambiente chimico debolmente aggressivo	Suoli naturali ed acqua del terreno
XA2	Ambiente chimico moderatamente aggressivo	Suoli naturali ed acqua del terreno
XA3	Ambiente chimico fortemente aggressivo	Suoli naturali ed acqua del terreno

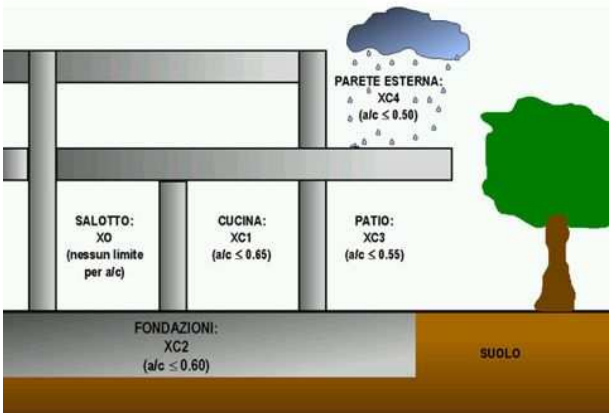

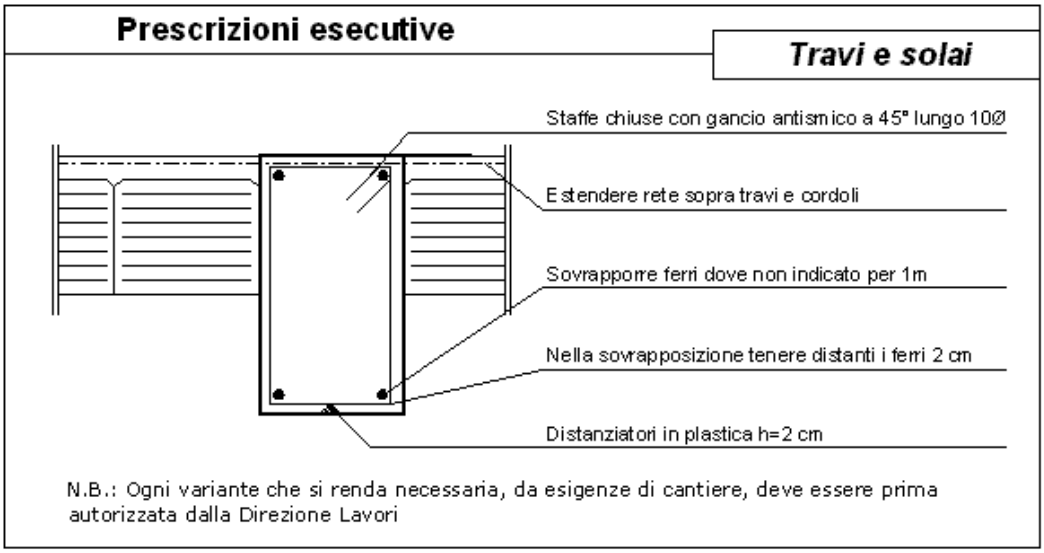

- Sovrapporre i ferri nelle riprese per almeno 60 diametri ;
- Impiegare distanziatori in plastica o pasta di cemento per garantire un copriferro (misurato dall'esterno ferro e non dal baricentro ferro) di almeno cm 2,5 per le travi e cm 3 per i pilastri (a meno di prescrizioni superiori per esigenze di REI) ;
- Estendere la rete nella soletta dei solai fino all'esterno cordolo o travi ;
- Sovrapporre le reti di cui sopra per almeno cm 20 ;
- Ancorare i ferri aggiuntivi superiori dei solai all'esterno delle travi di bordo, curando di tenere il baricentro a circa 2.5 cm dal filo superiore del getto della caldana del solaio ;
- Nella giunzione per sovrapposizione dei ferri, non legare i due ferri fra loro, ma tenerli distanziati di almeno cm 2 (interferro).

03.2 Acciaio in profilati

Id	Tipo / Note		Young	Poisson	G	Gamma	Alfa
		daN/cm2	daN/cm2		daN/cm2	daN/cm3	
11	acciaio Fe430 - S275		2.100e+06	0.30	8.077e+05	7.80e-03	1.20e-05
	ft	4300.0					
	fy	2750.0					
	fd	2750.0					
	fdt	2500.0					
	sadm	1900.0					
	sadmt	1700.0					

Aste acc.	1/7/..	2/8/..	3/9/..	4/10/..	5/11/..	6/12/..
Generalità						
Beta assegnato	0.80					
Verifica come controvento	No					
Usa condizioni I e II	Si					
Coefficiente gamma M0	1.05					
Coefficiente gamma M1	1.05					
Coefficiente gamma M2	1.25					

Pilastri acc.	1/7/..	2/8/..	3/9/..	4/10/..	5/11/..	6/12/..
Lunghezze libere						
Metodo di calcolo 2-2	Assegnato					
2-2 Beta assegnato	2.00					
2-2 Beta * L assegnato [cm]	0.0					
Metodo di calcolo 3-3	Assegnato					
3-3 Beta assegnato	2.00					
3-3 Beta * L assegnato [cm]	0.0					
1-1 Beta assegnato	1.00					
1-1 Beta * L assegnato [cm]	0.0					
Generalità						
Coefficiente gamma M0	1.05					
Coefficiente gamma M1	1.05					
Coefficiente gamma M2	1.25					
Effetti del 2 ordine	Si					
Momenti equivalenti	Si					
Usa condizioni I e II	Si					

Travi acc.	1/7/..	2/8/..	3/9/..	4/10/..	5/11/..	6/12/..
Lunghezze libere						
3-3 Beta * L automatico	Si					
3-3 Beta assegnato	1.00					
3-3 Beta assegnato [cm]	0.0					
2-2 Beta * L automatico	Si					
2-2 Beta assegnato	1.00					
2-2 Beta * L assegnato [cm]	0.0					
1-1 Beta * L automatico	Si					
1-1 Beta assegnato	1.00					
1-1 Beta * L assegnato [cm]	0.0					
Generalità						
Coefficiente gamma M0	1.05					
Coefficiente gamma M1	1.05					
Coefficiente gamma M2	1.25					
Luce di taglio per GR [cm]	1.00					
Usa condizioni I e II	Si					
Momenti equivalenti	Si					

04. Valutazioni sulla vita dell'opera strutturale

Mediante l'ausilio del calcolatore sono state calcolate le stabilità globali e strutturali omogenee a quelle che graveranno sulle parti strutturali del manufatto, in virtù delle azioni che gravano su di esso in considerazione della Vita Nominale pari a V_N=100 anni ed una Classe d'uso II, per il quale si valuta un coefficiente d'uso c_U= 2,0.

Dette azioni sono poi combinate secondo i coefficienti di combinazione funzione della categoria dell'azione in relazione alla struttura e/o di parte di essa.

Parametri della struttura			
Classe d'uso	Vita Vn [anni]	Coeff. Uso	Periodo Vr [anni]
IV	100.0	2.0	200.0

05. Analisi dei carichi gravanti sul nuovo solaio

05.1 Carico permanente

Per quanto riguarda il carico permanente sarà considerato il peso del serbatoio a pieno carico.

05.2 Carico variabile

In conformità alla destinazione uso non si considera alcun sovraccarico gravante sul serbatoio.

05.3 Carico variabile - Neve

In conformità a quanto indicato dal cap.3.4 e successivi della Circ.02/02/09 sono stati ricavati i valori di riferimento:

○	**Zona I - Alpina** Aosta, Belluno, Bergamo, Biella, Bolzano, Brescia, Como, Cuneo, Lecco, Pordenone, Sondrio, Torino, Trento, Udine, Verbania, Vercelli, Vicenza.	q_{sk} = 1,50 kN/mq $a_s \leq 200$ m q_{sk} = 1,39 [1+(a_s/728)^2] kN/mq $a_s > 200$ m
○	**Zona I - Mediterranea** Alessandria, Ancona, Asti, Bologna, Cremona, Forlì-Cesena, Lodi, Milano, Modena, Novara, Parma, Pavia, Pesaro e Urbino, Piacenza, Ravenna, Reggio Emilia, Rimini, Treviso, Varese.	q_{sk} = 1,50 kN/mq $a_s \leq 200$ m q_{sk} = 1,35 [1+(a_s/602)^2] kN/mq $a_s > 200$ m
◉	**Zona II** Arezzo, Ascoli Piceno, Bari, Campobasso, Chieti, Ferrara, Firenze, Foggia, Genova, Gorizia, Imperia, Isernia, La Spezia, Lucca, Macerata, Mantova, Massa Carrara, Padova, Perugia, Pescara, Pistoia, Prato, Rovigo, Savona, Teramo, Trieste, Venezia, Verona.	q_{sk} = 1,00 kN/mq $a_s \leq 200$ m q_{sk} = 0,85 [1+(a_s/481)^2] kN/mq $a_s > 200$ m
○	**Zona III** Agrigento, Avellino, Benevento, Brindisi, Cagliari, Caltanisetta, Carbonia-Iglesias, Caserta, Catania, Catanzaro, Cosenza, Crotone, Enna, Frosinone, Grosseto, L'Aquila, Latina, Lecce, Livorno, Matera, Medio Campidano, Messina, Napoli, Nuoro, Ogliastra, Olbia Tempio, Oristano, Palermo, Pisa, Potenza, Ragusa, Reggio Calabria, Rieti, Roma, Salerno, Sassari, Siena, Siracusa, Taranto, Terni, Trapani, Vibo Valentia, Viterbo.	q_{sk} = 0,60 kN/mq $a_s \leq 200$ m q_{sk} = 0,51 [1+(a_s/481^2] kN/mq $a_s > 200$ m

q_s (carico neve sulla copertura [N/mq]) = $\mu_i \cdot q_{sk} \cdot C_E \cdot C_t$
μ_i (coefficiente di forma)
q_{sk} (valore caratteristico della neve al suolo [kN/mq])
C_E (coefficiente di esposizione)
C_t (coefficiente termico)

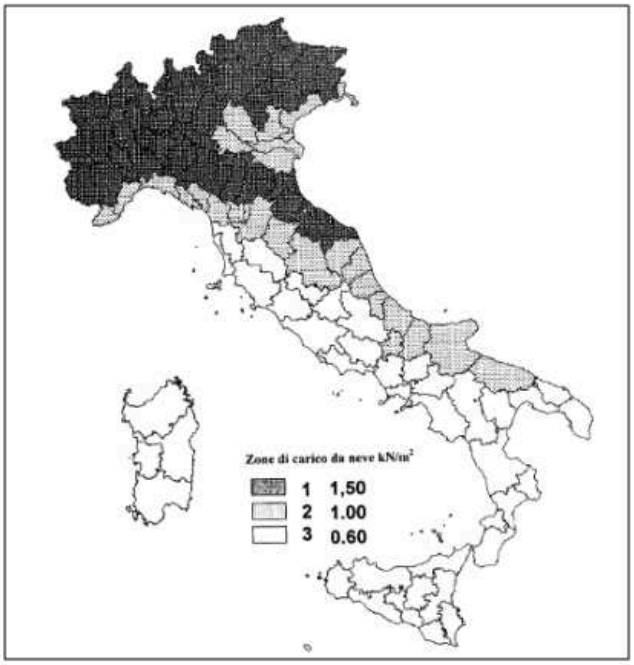

Valore carratteristicio della neve al suolo

a_s (altitudine sul livello del mare [m])	50
q_{sk} (val. caratt. della neve al suolo [kN/mq])	1,00

Coefficiente termico

Il coefficiente termico può essere utilizzato per tener conto della riduzione del carico neve a causa dello scioglimento della stessa, causata dalla perdita di calore della costruzione. Tale coefficiente tiene conto delle proprietà di isolamento termico del materiale utilizzato in copertura. In assenza di uno specifico e documentato studio, deve essere utilizzato **Ct = 1**.

Coefficiente di esposizione

Topografia	Descrizione	C_E
Normale	Aree in cui non è presente una significativa rimozione di neve sulla costruzione prodotta dal vento, a causa del terreno, altre costruzioni o alberi.	1

Valore del carico della neve al suolo

q_s (carico della neve al suolo [kN/mq])	1,00

Coefficiente di forma (copertura ad una falda)

α (inclinazione falda [°])	0

μ	0,8

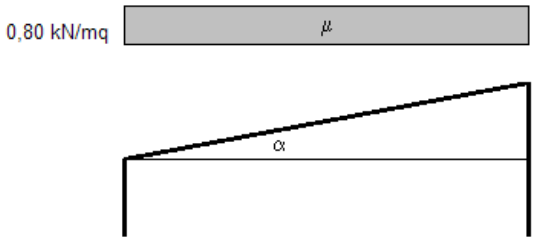

05.4 Carico variabile - Vento

Detto carico risulta ininfluente per la presente valutazione. Risulta maggiormente penalizzante l'azione sismica.

06. Azione sismica

L'azione sismica sulle costruzioni è valutata a partire dalla "pericolosità sismica di base", in condizioni ideali di sito di riferimento rigido con superficie topografica orizzontale.

Allo stato attuale, la pericolosità sismica su reticolo di riferimento nell'intervallo di riferimento è fornita dai dati pubblicati sul sito http://esse1.mi.ingv.it/. Per punti non coincidenti con il reticolo di riferimento e periodi di ritorno non contemplati direttamente si opera come indicato nell' allegato alle NTC (rispettivamente media pesata e interpolazione).

L'azione sismica viene definita in relazione ad un periodo di riferimento Vr che si ricava, per ciascun tipo di costruzione, moltiplicandone la vita nominale per il coefficiente d'uso (vedi tabella Parametri della struttura). Fissato il periodo di riferimento Vr e la probabilità di superamento Pver associata a ciascuno degli stati limite considerati, si ottiene il periodo di ritorno Tr e i relativi parametri di pericolosità sismica (vedi tabella successiva):

ag: accelerazione orizzontale massima del terreno;

Fo: valore massimo del fattore di amplificazione dello spettro in accelerazione orizzontale;

T*c: periodo di inizio del tratto a velocità costante dello spettro in accelerazione orizzontale;

Parametri della struttura					
Classe d'uso	Vita Vn [anni]	Coeff. Uso	Periodo Vr [anni]	Tipo di suolo	Categoria topografica
IV	100.0	2.0	200.0	B	T1

Individuati su reticolo di riferimento i parametri di pericolosità sismica si valutano i parametri spettrali riportati in tabella:

S è il coefficiente che tiene conto della categoria di sottosuolo e delle condizioni topografiche mediante la relazione seguente S = Ss*St (3.2.5)

Fo è il fattore che quantifica l'amplificazione spettrale massima, su sito di riferimento rigido orizzontale

Fv è il fattore che quantifica l'amplificazione spettrale massima verticale, in termini di accelerazione orizzontale massima del terreno ag su sito di riferimento rigido orizzontale

Tb è il periodo corrispondente all'inizio del tratto dello spettro ad accelerazione costante.

Tc è il periodo corrispondente all'inizio del tratto dello spettro a velocità costante.

Td è il periodo corrispondente all'inizio del tratto dello spettro a spostamento costante.

Id nodo	**Longitudine**	**Latitudine**	**Distanza**
			Km
Loc.	8.898	44.419	
16917	8.872	44.395	3.363
16918	8.942	44.398	4.190
16696	8.938	44.448	4.511
16695	8.868	44.445	3.734

SL	**Pver**	**Tr**	**ag**	**Fo**	**T*c**
		Anni	g		sec
SLO	81.0	120.0	0.041	2.540	0.250
SLD	63.0	201.0	0.050	2.530	0.270
SLV	10.0	1898.0	0.109	2.530	0.310
SLC	5.0	2475.0	0.119	2.530	0.310

SL	**ag**	**S**	**Fo**	**Fv**	**Tb**	**Tc**	**Td**
	g				sec	sec	sec
SLO	0.041	1.200	2.540	0.694	0.121	0.363	1.764
SLD	0.050	1.200	2.530	0.765	0.129	0.386	1.801
SLV	0.109	1.200	2.530	1.127	0.144	0.431	2.035
SLC	0.119	1.200	2.530	1.178	0.144	0.431	2.076

07. Validazione della modellazione

Al fine di elaborare il comportamento strutturale alle azioni che si prevedono sul modello in oggetto, si è impiegato il software PRO-SAP della 2S.I. – Software e Servizi per l'Ingegneria S.r.l..

Informazioni sul codice di calcolo	
Titolo:	PRO_SAP PROfessional Structural Analysis Program
Versione:	PROFESSIONAL (build 2014-07-168)
Produttore-Distributore:	2S.I. Software e Servizi per l'Ingegneria s.r.l., Ferrara
Dati utente finale:	Studio Tecnico di Ingegneria Dott.Ing.Davide Barilli
Codice Utente:	002433/cli
Codice Licenza:	Licenza dsi4627

07.1 Criteri di analisi della sicurezza e metodi di analisi strutturale

La verifica della sicurezza degli elementi strutturali avviene con il metodo agli stati limite.

I metodi impiegati per l' analisi strutturale sono i seguenti :

- per carichi statici: metodo degli spostamenti
- carichi sismici: analisi statica equivalente, oppure
  analisi dinamica modale con spettro di risposta

Spostamenti e azioni sono calcolati con il metodo agli elementi finiti (F.E.M.). Il metodo degli elementi finiti si basa sulla schematizzazione di una struttura come insieme di elementi di varie geometrie e caratteristiche, connessi l'un l'altro solo in corrispondenza di un numero determinato di punti chiamati 'nodi'. Tali nodi, definiti da tre coordinate rispetto ad un sistema di riferimento cartesiano globale, vengono contrassegnati da un identificatore numerico ('numerazione nodale') crescente a partire da 1. Anche gli elementi, risultano a loro volta individuati da un identificatore numerico crescente.

Incognite del problema (metodo degli spostamenti) sono assunte le 6 componenti di spostamento di ogni nodo, riferite alla terna globale (traslazioni secondo X,Y,Z, rotazioni attorno X,Y,Z) escluse naturalmente quelle impedite dai vincoli imposti alla struttura.

Il metodo permette di giungere all' impostazione di un sistema di equazioni algebriche lineari, nelle sopra citate componenti di spostamento (gradi di libertà) i cui termini noti sono costituiti dai carichi agenti sulla struttura opportunamente concentrati nei nodi:

$K * u = F$ dove K = matrice di rigidezza
u = vettore spostamenti nodali
F = vettore forze nodali

Dagli spostamenti risultanti dalla risoluzione del sistema vengono quindi dedotte le solllecitazioni e/o le tensioni in punti caratteristici di ogni elemento, riferite generalmente ad una terna locale all' elemento stesso.

Affidabilità dei codici utilizzati
2S.I. ha verificato l'affidabilità e la robustezza del codice di calcolo attraverso un numero significativo di casi prova in cui i risultati dell'analisi numerica sono stati confrontati con soluzioni teoriche. E' possibile reperire la documentazione contenente alcuni dei più significativi casi trattati al seguente link: http://www.2si.it/Software/Affidabilità.htm

Informazioni generali sull'elaborazione e giudizio motivato di accettabilità dei risultati.
Il programma prevede una serie di controlli automatici (check) che consentono l'individuazione di errori di modellazione. Al termine dell'analisi un controllo automatico identifica la presenza di spostamenti o rotazioni abnormi. Si può pertanto asserire che l'elaborazione sia corretta e completa. I risultati delle elaborazioni sono stati sottoposti a controlli che ne comprovano l'attendibilità.

Tale valutazione ha compreso il confronto con i risultati di semplici calcoli, eseguiti con metodi tradizionali e adottati, anche in fase di primo proporzionamento della struttura. Inoltre, sulla base di considerazioni riguardanti gli stati tensionali e deformativi determinati, si è valutata la validità delle scelte operate in sede di schematizzazione e di modellazione della struttura e delle azioni. Si allega al termine della presente relazione elenco sintetico dei controlli svolti (verifiche di equilibrio tra reazioni vincolari e carichi applicati, comparazioni tra i risultati delle analisi e quelli di valutazioni semplificate, etc.) .

08. Verifica del sistema di supporto del serbatoio

Con l'ausilio del calcolatore è stato verificato il manufatto in oggetto, di cui si allega lo schema del modello ed i principali risultati estrapolati dall'output del calcolatore.

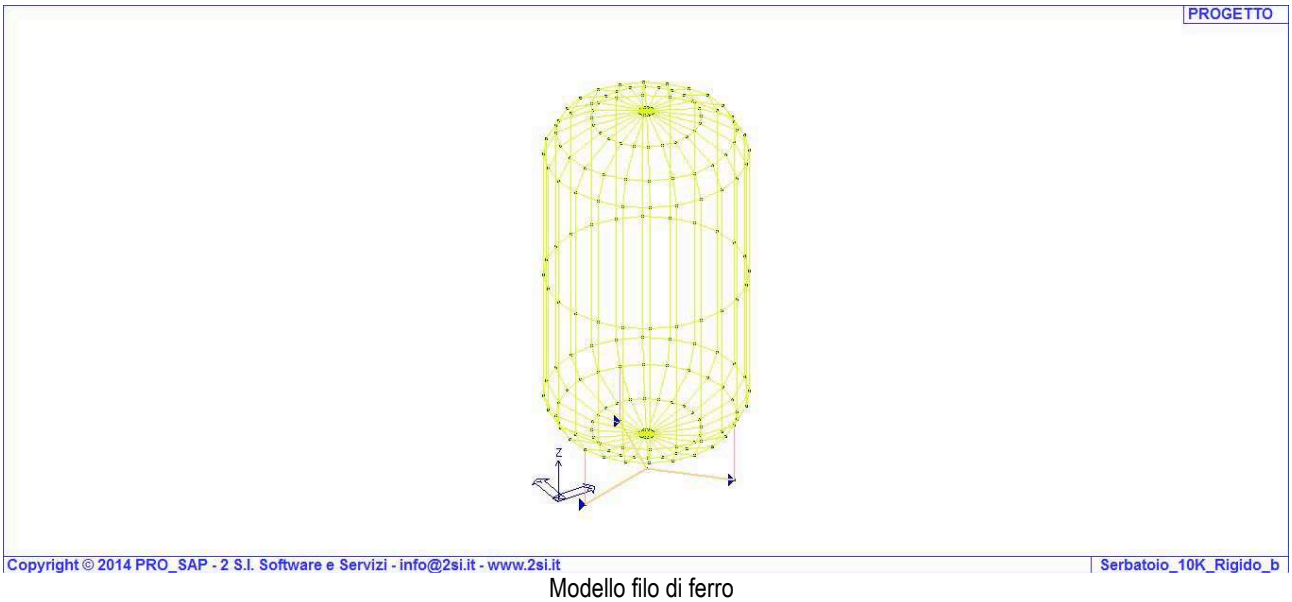

Modello filo di ferro

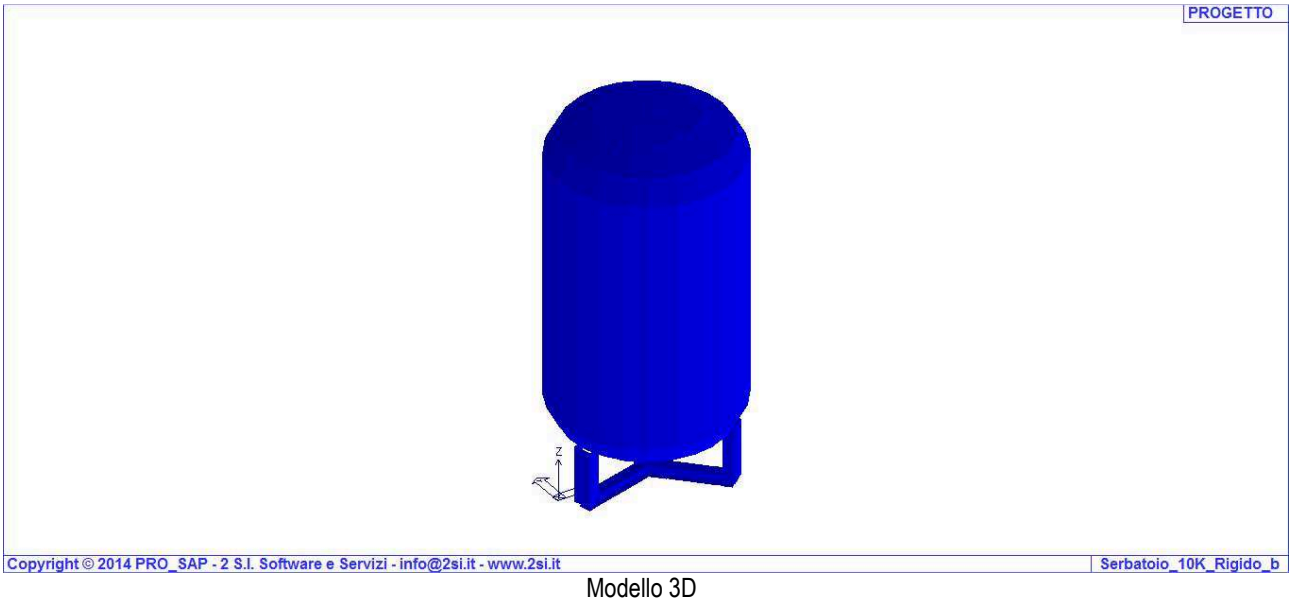

Modello 3D

MODELLAZIONE DELLE SEZIONI

Il programma consente l'uso di sezioni diverse. Sono previsti i seguenti tipi di sezione:

1 sezione di tipo generico
2 profilati semplici
3 profilati accoppiati e speciali

Le sezioni utilizzate nella modellazione sono individuate da una sigla identificativa ed un codice numerico (gli elementi strutturali richiamano quest'ultimo nella propria descrizione). Per ogni sezione vengono riportati in tabella i seguenti dati:

Area	area della sezione
A V2	area della sezione/fattore di taglio (per il taglio in direzione 2)
A V3	area della sezione/fattore di taglio (per il taglio in direzione 3)
Jt	fattore torsionale di rigidezza
J2-2	momento d'inerzia della sezione riferito all'asse 2
J3-3	momento d'inerzia della sezione riferito all'asse 3
W2-2	modulo di resistenza della sezione riferito all'asse 2
W3-3	modulo di resistenza della sezione riferito all'asse 3
Wp2-2	modulo di resistenza plastico della sezione riferito all'asse 2
Wp3-3	modulo di resistenza plastico della sezione riferito all'asse 3

I dati soprariportati vengono utilizzati per la determinazione dei carichi inerziali e per la definizione delle rigidezze degli elementi strutturali; qualora il valore di Area V2 (e/o Area V3) sia nullo la deformabilità per taglio V2 (e/o V3) è trascurata. La valutazione delle caratteristiche inerziali delle sezioni è condotta nel riferimento 2-3 dell'elemento.

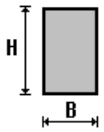 rettangolare	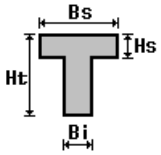 a T	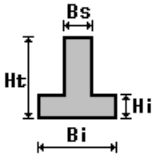 a T rovescia	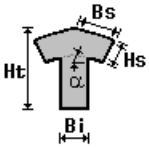 a T di colmo	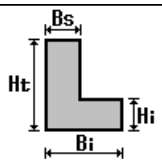 a L	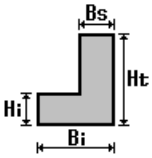 a L specchiata
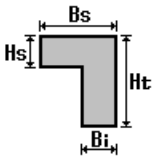 a L specchiata rovescia	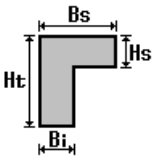 a L rovescia	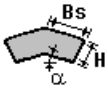 a L di colmo	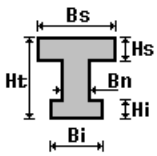 a doppio T	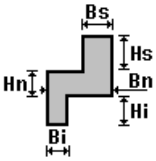 a quattro specchiata	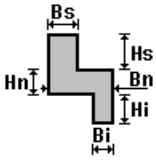 a quattro
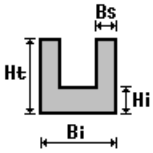 a U	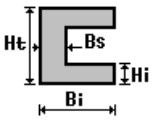 a C	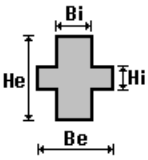 a croce	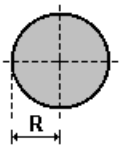 circolare	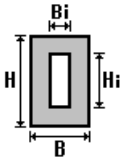 rettangolare cava	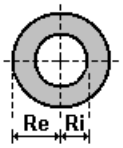 circolare cava

Per quanto concerne i profilati semplici ed accoppiati l'asse 2 del riferimento coincide con l'asse x riportato nei più diffusi profilatari.

Per quanto concerne le sezioni di tipo generico (tipo 1.):

i valori dimensionali con prefisso B sono riferiti all'asse 2

i valori dimensionali con prefisso H sono riferiti all'asse 3

Con riferimento al **Documento di Affidabilità** "*Test di validazione del software di calcolo PRO_SAP e dei moduli aggiuntivi PRO_SAP Modulo Geotecnico, PRO_CAD nodi acciaio e PRO_MST*" - versione Maggio 2011, disponibile per il download sul sito **www.2si.it**, si segnalano i seguenti esempi applicativi:

Test N°	Titolo
1	CARATTERISTICHE GEOMETRICHE E INERZIALI
44	VERIFICA AGLI SLU DI STRUTTURE IN C.A.
47	PROGETTAZIONE A TAGLIO DI STRUTTURE IN C.A. SECONDO IL D.M. 9/1/96
48	PROGETTAZIONE A TAGLIO DI STRUTTURE IN C.A. SECONDO IL D.M. 14/1/2008
49	VERIFICA ALLO SLE (TENSIONI E FESSURAZIONE) DI STRUTTURE IN C.A.
50	VERIFICA ALLO SLE (DEFORMAZIONE) DI STRUTTURE IN C.A.
95	ANALISI DI RESISTENZA AL FUOCO

Id	Tipo	Area	A V2	A V3	Jt	J 2-2	J 3-3	W 2-2	W 3-3	Wp 2-2	Wp 3-3
		cm2	cm2	cm2	cm4	cm4	cm4	cm3	cm3	cm3	cm3
1	U : bi=30.00 ht=20.00 bs=0.80 hi=0.80	54.72	0.0	0.0	11.69	8349.91	2292.37	556.66	163.90	667.99	196.69
2	HEA 200	53.80	0.0	0.0	21.00	1336.00	3692.00	133.60	388.60	203.80	429.50

MODELLAZIONE STRUTTURA: NODI

Il programma utilizza per la modellazione nodi strutturali.

Ogni nodo è individuato dalle coordinate cartesiane nel sistema di riferimento globale (X Y Z).

Ad ogni nodo è eventualmente associato un codice di vincolamento rigido, un codice di fondazione speciale, ed un set di sei molle (tre per le traslazioni, tre per le rotazioni). Le tabelle sottoriportate riflettono le succitate possibilità. In particolare per ogni nodo viene indicato in tabella:

Nodo	numero del nodo.
X	valore della coordinata X
Y	valore della coordinata Y
Z	valore della coordinata Z

Per i nodi ai quali sia associato un codice di vincolamento rigido, un codice di fondazione speciale o un set di molle viene indicato in tabella:

Nodo	numero del nodo.
X	valore della coordinata X
Y	valore della coordinata Y
Z	valore della coordinata Z
Note	eventuale codice di vincolo (es. v=110010 sei valori relativi ai sei gradi di libertà previsti per il nodo TxTyTzRxRyRz, il valore 1 indica che lo spostamento o rotazione relativo è impedito, il valore 0 indica che lo spostamento o rotazione relativo è libero).
Note	(FS = 1, 2,…) eventuale codice del tipo di fondazione speciale (1, 2,… fanno riferimento alle tipologie: plinto, palo,

	plinto su pali,…) che è collegato al nodo. (ISO = "id SIGLA") indice e sigla identificativa dell' eventuale isolatore sismico assegnato al nodo
Rig. TX	valore della rigidezza dei vincoli elastici eventualmente applicati al nodo, nello specifico TX (idem per TY, TZ, RX, RY, RZ).

Per strutture sismicamente isolate viene inoltre inserita la tabella delle caratteristiche per gli isolatori utilizzati; le caratteristiche sono indicate in conformità al cap. 7.10 del D.M. 14/01/08

TABELLA DATI NODI

Nodo	X	Y	Z	Nodo	X	Y	Z	Nodo	X	Y	Z
	cm	cm	cm		cm	cm	cm		cm	cm	cm
1	160.0	0.0	60.0	2	140.0	0.0	60.0	3	0.0	0.0	130.0
4	0.0	0.0	548.5	5	140.0	0.0	618.5	6	160.0	0.0	618.5
7	18.8	0.0	583.5	8	70.0	0.0	609.1	9	0.0	0.0	339.3
10	281.2	0.0	95.0	11	300.0	0.0	130.0	12	18.8	0.0	95.0
13	70.0	0.0	69.4	14	150.0	0.0	60.0	15	150.0	0.0	618.5
16	300.0	0.0	548.5	17	230.0	0.0	69.4	18	281.2	0.0	583.5
19	230.0	0.0	609.1	20	300.0	0.0	339.3	21	159.7	-2.6	60.0
22	140.3	2.6	60.0	23	5.1	38.8	130.0	24	5.1	38.8	548.5
25	140.3	2.6	618.5	26	159.7	-2.6	618.5	27	23.2	34.0	583.5
28	72.7	20.7	609.1	29	5.1	38.8	339.3	30	276.8	-34.0	95.0
31	294.9	-38.8	130.0	32	23.2	34.0	95.0	33	72.7	20.7	69.4
34	80.7	-40.0	609.1	35	20.1	-75.0	339.3	36	294.9	-38.8	548.5
37	227.3	-20.7	69.4	38	276.8	-34.0	583.5	39	227.3	-20.7	609.1
40	294.9	-38.8	339.3	41	158.7	-5.0	60.0	42	141.3	5.0	60.0
43	20.1	75.0	130.0	44	20.1	75.0	548.5	45	141.3	5.0	618.5
46	158.7	-5.0	618.5	47	36.3	65.6	583.5	48	80.7	40.0	609.1
49	20.1	75.0	339.3	50	263.7	-65.6	95.0	51	279.9	-75.0	130.0
52	36.3	65.6	95.0	53	80.7	40.0	69.4	54	140.3	-2.6	60.0
55	159.7	2.6	60.0	56	279.9	-75.0	548.5	57	219.3	-40.0	69.4
58	263.7	-65.6	583.5	59	219.3	-40.0	609.1	60	279.9	-75.0	339.3
61	157.1	-7.1	60.0	62	142.9	7.1	60.0	63	43.9	106.1	130.0
64	43.9	106.1	548.5	65	142.9	7.1	618.5	66	157.1	-7.1	618.5
67	57.2	92.8	583.5	68	93.4	56.6	609.1	69	43.9	106.1	339.3
70	242.8	-92.8	95.0	71	256.1	-106.1	130.0	72	57.2	92.8	95.0
73	93.4	56.6	69.4	74	294.9	38.8	130.0	75	294.9	38.8	548.5
76	256.1	-106.1	548.5	77	206.6	-56.6	69.4	78	242.8	-92.8	583.5
79	206.6	-56.6	609.1	80	256.1	-106.1	339.3	81	155.0	-8.7	60.0
82	145.0	8.7	60.0	83	75.0	129.9	130.0	84	75.0	129.9	548.5
85	145.0	8.7	618.5	86	155.0	-8.7	618.5	87	84.4	113.7	583.5
88	110.0	69.3	609.1	89	75.0	129.9	339.3	90	215.6	-113.7	95.0
91	225.0	-129.9	130.0	92	84.4	113.7	95.0	93	110.0	69.3	69.4
94	159.7	2.6	618.5	95	140.3	-2.6	618.5	96	225.0	-129.9	548.5
97	190.0	-69.3	69.4	98	215.6	-113.7	583.5	99	190.0	-69.3	609.1
100	225.0	-129.9	339.3	101	152.6	-9.7	60.0	102	147.4	9.7	60.0
103	111.2	144.9	130.0	104	111.2	144.9	548.5	105	147.4	9.7	618.5
106	152.6	-9.7	618.5	107	116.0	126.8	583.5	108	129.3	77.3	609.1
109	111.2	144.9	339.3	110	184.0	-126.8	95.0	111	188.8	-144.9	130.0
112	116.0	126.8	95.0	113	129.3	77.3	69.4	114	276.8	34.0	583.5
115	227.3	20.7	609.1	116	188.8	-144.9	548.5	117	170.7	-77.3	69.4
118	184.0	-126.8	583.5	119	170.7	-77.3	609.1	120	188.8	-144.9	339.3
121	150.0	-10.0	60.0	122	150.0	10.0	60.0	123	150.0	150.0	130.0
124	150.0	150.0	548.5	125	150.0	10.0	618.5	126	150.0	-10.0	618.5
127	150.0	131.2	583.5	128	150.0	80.0	609.1	129	150.0	150.0	339.3
130	150.0	-131.2	95.0	131	150.0	-150.0	130.0	132	150.0	131.2	95.0
133	150.0	80.0	69.4	134	294.9	38.8	339.3	135	23.2	-34.0	95.0
136	150.0	-150.0	548.5	137	150.0	-80.0	69.4	138	150.0	-131.2	583.5
139	150.0	-80.0	609.1	140	150.0	-150.0	339.3	141	147.4	-9.7	60.0
142	152.6	9.7	60.0	143	188.8	144.9	130.0	144	188.8	144.9	548.5
145	152.6	9.7	618.5	146	147.4	-9.7	618.5	147	184.0	126.8	583.5
148	170.7	77.3	609.1	149	188.8	144.9	339.3	150	116.0	-126.8	95.0
151	111.2	-144.9	130.0	152	184.0	126.8	95.0	153	170.7	77.3	69.4
154	5.1	-38.8	130.0	155	276.8	34.0	95.0	156	111.2	-144.9	548.5
157	129.3	-77.3	69.4	158	116.0	-126.8	583.5	159	129.3	-77.3	609.1
160	111.2	-144.9	339.3	161	145.0	-8.7	60.0	162	155.0	8.7	60.0
163	225.0	129.9	130.0	164	225.0	129.9	548.5	165	155.0	8.7	618.5
166	145.0	-8.7	618.5	167	215.6	113.7	583.5	168	190.0	69.3	609.1
169	225.0	129.9	339.3	170	84.4	-113.7	95.0	171	75.0	-129.9	130.0
172	215.6	113.7	95.0	173	190.0	69.3	69.4	174	227.3	20.7	69.4
175	72.7	-20.7	609.1	176	75.0	-129.9	548.5	177	110.0	-69.3	69.4
178	84.4	-113.7	583.5	179	110.0	-69.3	609.1	180	75.0	-129.9	339.3

181	142.9	-7.1	60.0	182	157.1	7.1	60.0	183	256.1	106.1	130.0
184	256.1	106.1	548.5	185	157.1	7.1	618.5	186	142.9	-7.1	618.5
187	242.8	92.8	583.5	188	206.6	56.6	609.1	189	256.1	106.1	339.3
190	57.2	-92.8	95.0	191	43.9	-106.1	130.0	192	242.8	92.8	95.0
193	206.6	56.6	69.4	194	5.1	-38.8	339.3	195	5.1	-38.8	548.5
196	43.9	-106.1	548.5	197	93.4	-56.6	69.4	198	57.2	-92.8	583.5
199	93.4	-56.6	609.1	200	43.9	-106.1	339.3	201	141.3	-5.0	60.0
202	158.7	5.0	60.0	203	279.9	75.0	130.0	204	279.9	75.0	548.5
205	158.7	5.0	618.5	206	141.3	-5.0	618.5	207	263.7	65.6	583.5
208	219.3	40.0	609.1	209	279.9	75.0	339.3	210	36.3	-65.6	95.0
211	20.1	-75.0	130.0	212	263.7	65.6	95.0	213	219.3	40.0	69.4
214	72.7	-20.7	69.4	215	23.2	-34.0	583.5	216	20.1	-75.0	548.5
217	80.7	-40.0	69.4	218	36.3	-65.6	583.5	222	150.0	0.0	1.48e-04

Nodo	X	Y	Z	Note	Rig. TX	Rig. TY	Rig. TZ	Rig. RX	Rig. RY	Rig. RZ
	cm	cm	cm		daN/cm	daN/cm	daN/cm	daN cm/rad	daN cm/rad	daN cm/rad
219	242.8	-92.8	0.0	v=001000						
220	184.0	126.8	2.22e-04	v=001000						
221	23.2	-34.0	2.22e-04	v=001000						

MODELLAZIONE STRUTTURA: ELEMENTI TRAVE

Il programma utilizza per la modellazione elementi a due nodi denominati in generale travi.

Ogni elemento trave è individuato dal nodo iniziale e dal nodo finale.

Ogni elemento è caratterizzato da un insieme di proprietà riportate in tabella che ne completano la modellazione.

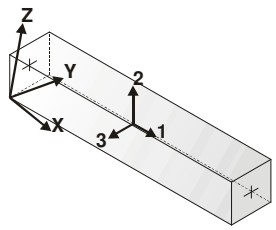

orientamento elementi 2D non verticali

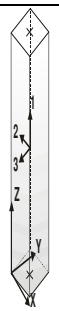

orientamento elementi 2D verticali

In particolare per ogni elemento viene indicato in tabella:

Elem.	numero dell'elemento
Note	codice di comportamento: trave, trave di fondazione, pilastro, asta, asta tesa, asta compressa
Nodo I (J)	numero del nodo iniziale (finale)
Mat.	codice del materiale assegnato all'elemento
Sez.	codice della sezione assegnata all'elemento
Rotaz.	valore della rotazione dell'elemento, attorno al proprio asse, nel caso in cui l'orientamento di default non sia adottabile; l'orientamento di default prevede per gli elementi non verticali l'asse 2 contenuto nel piano verticale e l'asse 3 orizzontale, per gli elementi verticali l'asse 2 diretto secondo X negativo e l'asse 3 diretto secondo Y negativo
Svincolo I (J)	codici di svincolo per le azioni interne; i primi sei codici si riferiscono al nodo iniziale, i restanti sei al nodo finale (il valore 1 indica che la relativa azione interna non è attiva)
Wink V	costante di sottofondo (coefficiente di Winkler) per la modellazione della trave su suolo elastico
Wink O	costante di sottofondo (coefficiente di Winkler) per la modellazione del suolo elastico orizzontale

Con riferimento al **Documento di Affidabilità** "*Test di validazione del software di calcolo PRO_SAP e dei moduli aggiuntivi PRO_SAP Modulo Geotecnico, PRO_CAD nodi acciaio e PRO_MST*" - versione Maggio 2011, disponibile per il download sul sito **www.2si.it**, si segnalano i seguenti esempi applicativi:

Test N°	Titolo
2	TRAVI A UNA CAMPATA
3	TRAVE A PIU' CAMPATE
4	TRAVE A UNA CAMPATA SU TERRENO ALLA WINKLER
5	TRAVI SU TERRENO ALLA WINKLER CON CARICO TRASVERSALE
6	TELAI PIANI CON CERNIERE ALLA BASE
7	TELAI PIANI CON INCASTRI ALLA BASE
11	STRUTTURE SOGGETTE A VARIAZIONI TERMICHE
12	STRUTTURE SU TERRENO ALLA WINKLER SOTTOPOSTE A CARICHI DISTRIBUITI TRIANGOLARI
21	DRILLING
24	TENSIONI E ROTAZIONI RISPETTO ALLA CORDA DI ELEMENTI TRAVE
27	FRECCIA DI ELEMENTI TRAVE
41	GERARCHIA DELLE RESISTENZE PER TRAVI IN C.A.
42	GERARCHIA DELLE RESISTENZE PER PILASTRI IN C.A.
43	VERIFICA ALLE TA DI STRUTTURE IN C.A.
44	VERIFICA AGLI SLU DI STRUTTURE IN C.A.
46	VERIFICA A PUNZONAMENTO ALLO SLU DI TRAVI IN C.A.
47	PROGETTAZIONE A TAGLIO DI STRUTTURE IN C.A. SECONDO IL D.M. 9/1/96
48	PROGETTAZIONE A TAGLIO DI STRUTTURE IN C.A. SECONDO IL D.M. 14/1/2008
49	VERIFICA ALLO SLE (TENSIONI E FESSURAZIONE) DI STRUTTURE IN C.A.
50	VERIFICA ALLO SLE (DEFORMAZIONE) DI STRUTTURE IN C.A.
51	FATTORE DI STRUTTURA
52	SOVRARESISTENZE
53	DETTAGLI COSTRUTTIVI C.A.: LIMITI D'ARMATURA PILASTRI E NODI TRAVE-PILASTRO
55	VERIFICA DI STABILITA' DI ASTE COMPRESSE IN ACCIAIO – METODO OMEGA
56	LUCE LIBERA DI TRAVI E ASTE IN ACCIAIO
57	LUCE LIBERA DI COLONNE IN ACCIAIO
58	SVERGOLAMENTO DI TRAVI IN ACCIAIO
63	STABILITA' DI ASTE COMPOSTE IN ACCIAIO
68	VALUTAZIONE EFFETTO P-δ SU PILASTRATA
69	VALUTAZIONE EFFETTO P-δ SU TELAIO 3D
80	ANALISI PUSHOVER DI UN EDIFICIO IN C.A.
82	ANALISI ELASTO PLASTICA INCREMENTALE
83	ANALISI ELASTO PLASTICA INCREMENTALE
89	VERIFICA ALLO SLU DI STRUTTURE IN LEGNO SECONDO EC5

90	VERIFICA ALLO SLE DI STRUTTURE IN LEGNO SECONDO EC5
93	SNELLEZZE EC5
120	PROGETTO E VERIFICA DI TRAVI PREM

Elem.	Note	Nodo I	Nodo J	Mat.	Sez.	Rotaz. gradi	Svincolo I	Svincolo J	Wink V daN/cm3	Wink O daN/cm3
1	Pilas.	220	152	11	1	90.00				
2	Pilas.	219	70	11	1	310.00				
3	Pilas.	221	135	11	1	200.00				
4	Trave f.	222	220	11	2				10.00	10.00
5	Trave f.	221	222	11	2				10.00	10.00
6	Trave f.	222	219	11	2				10.00	10.00

MODELLAZIONE STRUTTURA: ELEMENTI SHELL

Il programma utilizza per la modellazione elementi a tre o quattro nodi denominati in generale shell.

Ogni elemento shell è individuato dai nodi I, J, K, L (L=I per gli elementi a tre nodi).

Ogni elemento è caratterizzato da un insieme di proprietà riportate in tabella che ne completano la modellazione.

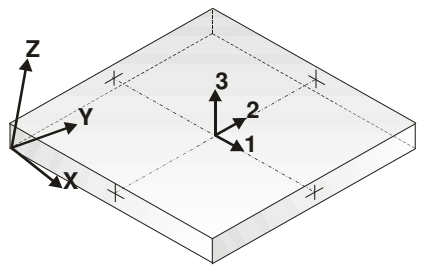

orientamento elementi 3D non verticali

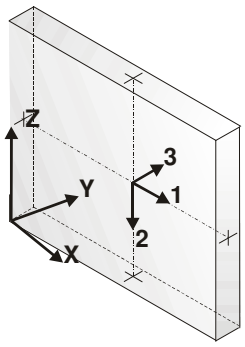

orientamento elementi 3D verticali

In particolare per ogni elemento viene indicato in tabella:

Elem.	numero dell'elemento
Note	codice di comportamento: *Guscio* (elemento guscio in elevazione non verticale) *Guscio fond.* (elemento guscio su suolo elastico) *Setto* (elemento guscio in elevazione verticale) *Membrana* (elemento guscio con comportamento membranale)
Nodo I (J, K, L)	numero del nodo I (J, K, L)
Mat.	codice del materiale assegnato all'elemento
Spessore	spessore dell'elemento (costante)
Wink V	costante di sottofondo (coefficiente di Winkler) per la modellazione del suolo elastico verticale
Wink O	costante di sottofondo (coefficiente di Winkler) per la modellazione del suolo elastico orizzontale

Con riferimento al **Documento di Affidabilità** "*Test di validazione del software di calcolo PRO_SAP e dei moduli aggiuntivi PRO_SAP Modulo Geotecnico, PRO_CAD nodi acciaio e PRO_MST*" - versione Maggio 2011, disponibile per il download sul sito **www.2si.it**, si segnalano i seguenti esempi applicativi:

Test N°	Titolo
8	MENSOLE CON ELEMENTI PLATE E MATERIALE ORTOTROPO
10	PIASTRA CON ELEMENTI PLATE E MATERIALE ORTOTROPO
21	DRILLING
25	TENSIONI DI ELEMENTI PLATE
31	REALIZZAZIONE DI MESH PIANA SU GEOMETRIA CON PUNTI FISSI IMPORTATA DA FILE .DXF
32	REALIZZAZIONE DI MESH PIANA SU GEOMETRIA CON SEGMENTI E FORI INTERNI IMPORTATA DA FILE .DXF
33	REALIZZAZIONE DI MESH PIANE SU GEOMETRIE COSTRUITE IN PRO_SAP
34	ANALISI DI BUCKLING DI PIASTRA ISOTROPA
35	ANALISI DI BUCKLING DI UN CILINDRO COMPRESSO INCASTRATO ALLA BASE
36	ANALISI DI PARETI FORATE
37	BIMETALLIC STRIP (NAFEMS EXERCISE 6)
38	ANALISI ELASTICA DI PIASTRA CON INTAGLIO CIRCOLARE (FLAT BAR WITH EDGE NOTCHES-NAFEMS EXERCISE 9)
39	PLATEA NERVATA
45	VERIFICA A PUNZONAMENTO ALLO SLU DI PIASTRE IN C.A.
117	PROGETTO E VERIFICA DI GUSCI IN MATERIALE XLAM
118	PROGETTO E VERIFICA DI PARETI IN MATERIALE XLAM E RELATIVI COLLEGAMENTI

Elem.	Note	Nodo I	Nodo J	Nodo K	Nodo L	Mat.	Spessore	Wink V	Wink O
							cm	daN/cm3	daN/cm3
1	Guscio	146	126	15		11	3.0		
2	Guscio	159	139	126	146	11	3.0		
3	Guscio	158	138	139	159	11	3.0		
4	Guscio	156	136	138	158	11	3.0		
5	Setto	156	136	140	160	11	3.0		
6	Guscio	141	121	14		11	3.0		
7	Guscio	157	137	121	141	11	3.0		
8	Guscio	150	130	137	157	11	3.0		
9	Guscio	151	131	130	150	11	3.0		
10	Setto	160	140	131	151	11	3.0		
11	Guscio	166	146	15		11	3.0		
12	Guscio	179	159	146	166	11	3.0		
13	Guscio	178	158	159	179	11	3.0		
14	Guscio	176	156	158	178	11	3.0		
15	Setto	176	156	160	180	11	3.0		
16	Guscio	161	141	14		11	3.0		
17	Guscio	177	157	141	161	11	3.0		
18	Guscio	170	150	157	177	11	3.0		
19	Guscio	171	151	150	170	11	3.0		
20	Setto	180	160	151	171	11	3.0		
21	Guscio	186	166	15		11	3.0		
22	Guscio	199	179	166	186	11	3.0		
23	Guscio	198	178	179	199	11	3.0		
24	Guscio	196	176	178	198	11	3.0		
25	Setto	196	176	180	200	11	3.0		
26	Guscio	181	161	14		11	3.0		
27	Guscio	197	177	161	181	11	3.0		

28	Guscio	190	170	177	197	11	3.0
29	Guscio	191	171	170	190	11	3.0
30	Setto	200	180	171	191	11	3.0
31	Guscio	206	186	15		11	3.0
32	Guscio	199	186	206	34	11	3.0
33	Guscio	198	199	34	218	11	3.0
34	Guscio	216	196	198	218	11	3.0
35	Setto	216	196	200	35	11	3.0
36	Guscio	201	181	14		11	3.0
37	Guscio	197	181	201	217	11	3.0
38	Guscio	190	197	217	210	11	3.0
39	Guscio	211	191	190	210	11	3.0
40	Setto	35	200	191	211	11	3.0
41	Guscio	95	206	15		11	3.0
42	Guscio	34	206	95	175	11	3.0
43	Guscio	218	34	175	215	11	3.0
44	Guscio	216	218	215	195	11	3.0
45	Setto	195	216	35	194	11	3.0
46	Guscio	54	201	14		11	3.0
47	Guscio	217	201	54	214	11	3.0
48	Guscio	210	217	214	135	11	3.0
49	Guscio	211	210	135	154	11	3.0
50	Setto	194	35	211	154	11	3.0
51	Guscio	5	95	15		11	3.0
52	Guscio	175	95	5	8	11	3.0
53	Guscio	215	175	8	7	11	3.0
54	Guscio	195	215	7	4	11	3.0
55	Setto	4	195	194	9	11	3.0
56	Guscio	2	54	14		11	3.0
57	Guscio	214	54	2	13	11	3.0
58	Guscio	135	214	13	12	11	3.0
59	Guscio	154	135	12	3	11	3.0
60	Setto	9	194	154	3	11	3.0
61	Guscio	5	15	25		11	3.0
62	Guscio	8	5	25	28	11	3.0
63	Guscio	7	8	28	27	11	3.0
64	Guscio	4	7	27	24	11	3.0
65	Setto	4	24	29	9	11	3.0
66	Guscio	2	14	22		11	3.0
67	Guscio	13	2	22	33	11	3.0
68	Guscio	12	13	33	32	11	3.0
69	Guscio	3	12	32	23	11	3.0
70	Setto	9	29	23	3	11	3.0
71	Guscio	25	15	45		11	3.0
72	Guscio	28	25	45	48	11	3.0
73	Guscio	27	28	48	47	11	3.0
74	Guscio	24	27	47	44	11	3.0
75	Setto	24	44	49	29	11	3.0
76	Guscio	22	14	42		11	3.0
77	Guscio	33	22	42	53	11	3.0
78	Guscio	32	33	53	52	11	3.0
79	Guscio	23	32	52	43	11	3.0
80	Setto	29	49	43	23	11	3.0
81	Guscio	45	15	65		11	3.0
82	Guscio	48	45	65	68	11	3.0
83	Guscio	47	48	68	67	11	3.0
84	Guscio	47	67	64	44	11	3.0
85	Setto	44	64	69	49	11	3.0
86	Guscio	42	14	62		11	3.0
87	Guscio	53	42	62	73	11	3.0
88	Guscio	52	53	73	72	11	3.0
89	Guscio	52	72	63	43	11	3.0
90	Setto	49	69	63	43	11	3.0
91	Guscio	65	15	85		11	3.0
92	Guscio	65	85	88	68	11	3.0
93	Guscio	68	88	87	67	11	3.0
94	Guscio	67	87	84	64	11	3.0
95	Setto	64	84	89	69	11	3.0
96	Guscio	62	14	82		11	3.0
97	Guscio	62	82	93	73	11	3.0
98	Guscio	73	93	92	72	11	3.0
99	Guscio	72	92	83	63	11	3.0
100	Setto	69	89	83	63	11	3.0
101	Guscio	85	15	105		11	3.0
102	Guscio	85	105	108	88	11	3.0
103	Guscio	88	108	107	87	11	3.0
104	Guscio	87	107	104	84	11	3.0

105	Setto	84	104	109	89	11	3.0
106	Guscio	82	14	102		11	3.0
107	Guscio	82	102	113	93	11	3.0
108	Guscio	93	113	112	92	11	3.0
109	Guscio	92	112	103	83	11	3.0
110	Setto	89	109	103	83	11	3.0
111	Guscio	105	15	125		11	3.0
112	Guscio	105	125	128	108	11	3.0
113	Guscio	108	128	127	107	11	3.0
114	Guscio	107	127	124	104	11	3.0
115	Setto	104	124	129	109	11	3.0
116	Guscio	102	14	122		11	3.0
117	Guscio	102	122	133	113	11	3.0
118	Guscio	113	133	132	112	11	3.0
119	Guscio	112	132	123	103	11	3.0
120	Setto	109	129	123	103	11	3.0
121	Guscio	125	15	145		11	3.0
122	Guscio	125	145	148	128	11	3.0
123	Guscio	128	148	147	127	11	3.0
124	Guscio	127	147	144	124	11	3.0
125	Setto	124	144	149	129	11	3.0
126	Guscio	122	14	142		11	3.0
127	Guscio	122	142	153	133	11	3.0
128	Guscio	133	153	152	132	11	3.0
129	Guscio	132	152	143	123	11	3.0
130	Setto	129	149	143	123	11	3.0
131	Guscio	15	165	145		11	3.0
132	Guscio	145	165	168	148	11	3.0
133	Guscio	148	168	167	147	11	3.0
134	Guscio	147	167	164	144	11	3.0
135	Setto	144	164	169	149	11	3.0
136	Guscio	14	162	142		11	3.0
137	Guscio	142	162	173	153	11	3.0
138	Guscio	153	173	172	152	11	3.0
139	Guscio	152	172	163	143	11	3.0
140	Setto	149	169	163	143	11	3.0
141	Guscio	15	185	165		11	3.0
142	Guscio	165	185	188	168	11	3.0
143	Guscio	168	188	187	167	11	3.0
144	Guscio	167	187	184	164	11	3.0
145	Setto	164	184	189	169	11	3.0
146	Guscio	14	182	162		11	3.0
147	Guscio	162	182	193	173	11	3.0
148	Guscio	173	193	192	172	11	3.0
149	Guscio	172	192	183	163	11	3.0
150	Setto	169	189	183	163	11	3.0
151	Guscio	15	205	185		11	3.0
152	Guscio	205	208	188	185	11	3.0
153	Guscio	208	207	187	188	11	3.0
154	Guscio	187	207	204	184	11	3.0
155	Setto	184	204	209	189	11	3.0
156	Guscio	14	202	182		11	3.0
157	Guscio	202	213	193	182	11	3.0
158	Guscio	213	212	192	193	11	3.0
159	Guscio	192	212	203	183	11	3.0
160	Setto	189	209	203	183	11	3.0
161	Guscio	15	94	205		11	3.0
162	Guscio	94	115	208	205	11	3.0
163	Guscio	115	114	207	208	11	3.0
164	Guscio	114	75	204	207	11	3.0
165	Setto	204	75	134	209	11	3.0
166	Guscio	14	55	202		11	3.0
167	Guscio	55	174	213	202	11	3.0
168	Guscio	174	155	212	213	11	3.0
169	Guscio	155	74	203	212	11	3.0
170	Setto	209	134	74	203	11	3.0
171	Guscio	15	6	94		11	3.0
172	Guscio	6	19	115	94	11	3.0
173	Guscio	19	18	114	115	11	3.0
174	Guscio	18	16	75	114	11	3.0
175	Setto	75	16	20	134	11	3.0
176	Guscio	14	1	55		11	3.0
177	Guscio	1	17	174	55	11	3.0
178	Guscio	17	10	155	174	11	3.0
179	Guscio	10	11	74	155	11	3.0
180	Setto	134	20	11	74	11	3.0
181	Guscio	15	26	6		11	3.0

182	Guscio	26	39	19	6	11	3.0
183	Guscio	39	38	18	19	11	3.0
184	Guscio	38	36	16	18	11	3.0
185	Setto	36	16	20	40	11	3.0
186	Guscio	14	21	1		11	3.0
187	Guscio	21	37	17	1	11	3.0
188	Guscio	37	30	10	17	11	3.0
189	Guscio	30	31	11	10	11	3.0
190	Setto	40	20	11	31	11	3.0
191	Guscio	15	46	26		11	3.0
192	Guscio	46	59	39	26	11	3.0
193	Guscio	59	58	38	39	11	3.0
194	Guscio	58	56	36	38	11	3.0
195	Setto	56	36	40	60	11	3.0
196	Guscio	14	41	21		11	3.0
197	Guscio	41	57	37	21	11	3.0
198	Guscio	57	50	30	37	11	3.0
199	Guscio	50	51	31	30	11	3.0
200	Setto	60	40	31	51	11	3.0
201	Guscio	15	66	46		11	3.0
202	Guscio	66	79	59	46	11	3.0
203	Guscio	79	78	58	59	11	3.0
204	Guscio	76	56	58	78	11	3.0
205	Setto	76	56	60	80	11	3.0
206	Guscio	14	61	41		11	3.0
207	Guscio	61	77	57	41	11	3.0
208	Guscio	77	70	50	57	11	3.0
209	Guscio	71	51	50	70	11	3.0
210	Setto	80	60	51	71	11	3.0
211	Guscio	15	86	66		11	3.0
212	Guscio	99	79	66	86	11	3.0
213	Guscio	98	78	79	99	11	3.0
214	Guscio	96	76	78	98	11	3.0
215	Setto	96	76	80	100	11	3.0
216	Guscio	14	81	61		11	3.0
217	Guscio	97	77	61	81	11	3.0
218	Guscio	90	70	77	97	11	3.0
219	Guscio	91	71	70	90	11	3.0
220	Setto	100	80	71	91	11	3.0
221	Guscio	15	106	86		11	3.0
222	Guscio	119	99	86	106	11	3.0
223	Guscio	118	98	99	119	11	3.0
224	Guscio	116	96	98	118	11	3.0
225	Setto	116	96	100	120	11	3.0
226	Guscio	14	101	81		11	3.0
227	Guscio	117	97	81	101	11	3.0
228	Guscio	110	90	97	117	11	3.0
229	Guscio	111	91	90	110	11	3.0
230	Setto	120	100	91	111	11	3.0
231	Guscio	126	106	15		11	3.0
232	Guscio	139	119	106	126	11	3.0
233	Guscio	138	118	119	139	11	3.0
234	Guscio	136	116	118	138	11	3.0
235	Setto	136	116	120	140	11	3.0
236	Guscio	121	101	14		11	3.0
237	Guscio	137	117	101	121	11	3.0
238	Guscio	130	110	117	137	11	3.0
239	Guscio	131	111	110	130	11	3.0
240	Setto	140	120	111	131	11	3.0

MODELLAZIONE DELLE AZIONI

Il programma consente l'uso di diverse tipologie di carico (azioni). Le azioni utilizzate nella modellazione sono individuate da una sigla identificativa ed un codice numerico (gli elementi strutturali richiamano quest'ultimo nella propria descrizione). Per ogni azione applicata alla struttura viene di riportato il codice, il tipo e la sigla identificativa. Le tabelle successive dettagliano i valori caratteristici di ogni azione in relazione al tipo. Le tabelle riportano infatti i seguenti dati in relazione al tipo:

1	**carico concentrato nodale** 6 dati (forza Fx, Fy, Fz, momento Mx, My, Mz)
2	**spostamento nodale impresso** 6 dati (spostamento Tx,Ty,Tz, rotazione Rx,Ry,Rz)
3	**carico distribuito globale su elemento tipo trave** 7 dati (fx,fy,fz,mx,my,mz,ascissa di inizio carico) 7 dati (fx,fy,fz,mx,my,mz,ascissa di fine carico)
4	**carico distribuito locale su elemento tipo trave** 7 dati (f1,f2,f3,m1,m2,m3,ascissa di inizio carico) 7 dati (f1,f2,f3,m1,m2,m3,ascissa di fine carico)
5	**carico concentrato globale su elemento tipo trave** 7 dati (Fx,Fy,Fz,Mx,My,Mz,ascissa di carico)
6	**carico concentrato locale su elemento tipo trave** 7 dati (F1, F2, F3, M1, M2, M3, ascissa di carico)
7	**variazione termica applicata ad elemento tipo trave** 7 dati (variazioni termiche: uniforme, media e differenza in altezza e larghezza al nodo iniziale e finale)
8	**carico di pressione uniforme su elemento tipo piastra** 1 dato (pressione)
9	**carico di pressione variabile su elemento tipo piastra** 4 dati (pressione, quota, pressione, quota)
10	**variazione termica applicata ad elemento tipo piastra** 2 dati (variazioni termiche: media e differenza nello spessore)
11	**carico variabile generale su elementi tipo trave e piastra** 1 dato descrizione della tipologia 4 dati per segmento (posizione, valore, posizione, valore) la tipologia precisa l'ascissa di definizione, la direzione del carico, la modalità di carico e la larghezza d'influenza per gli elementi tipo trave
12	**gruppo di carichi con impronta su piastra** 9 dati (numero di ripetizioni in direzione X e Y, valore di ciascun carico, posizione centrale del primo, dimensioni dell' impronta, interasse tra i carichi

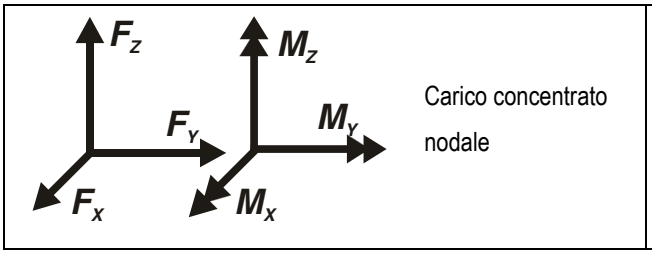

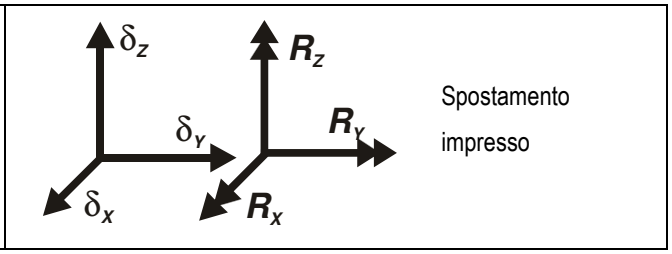

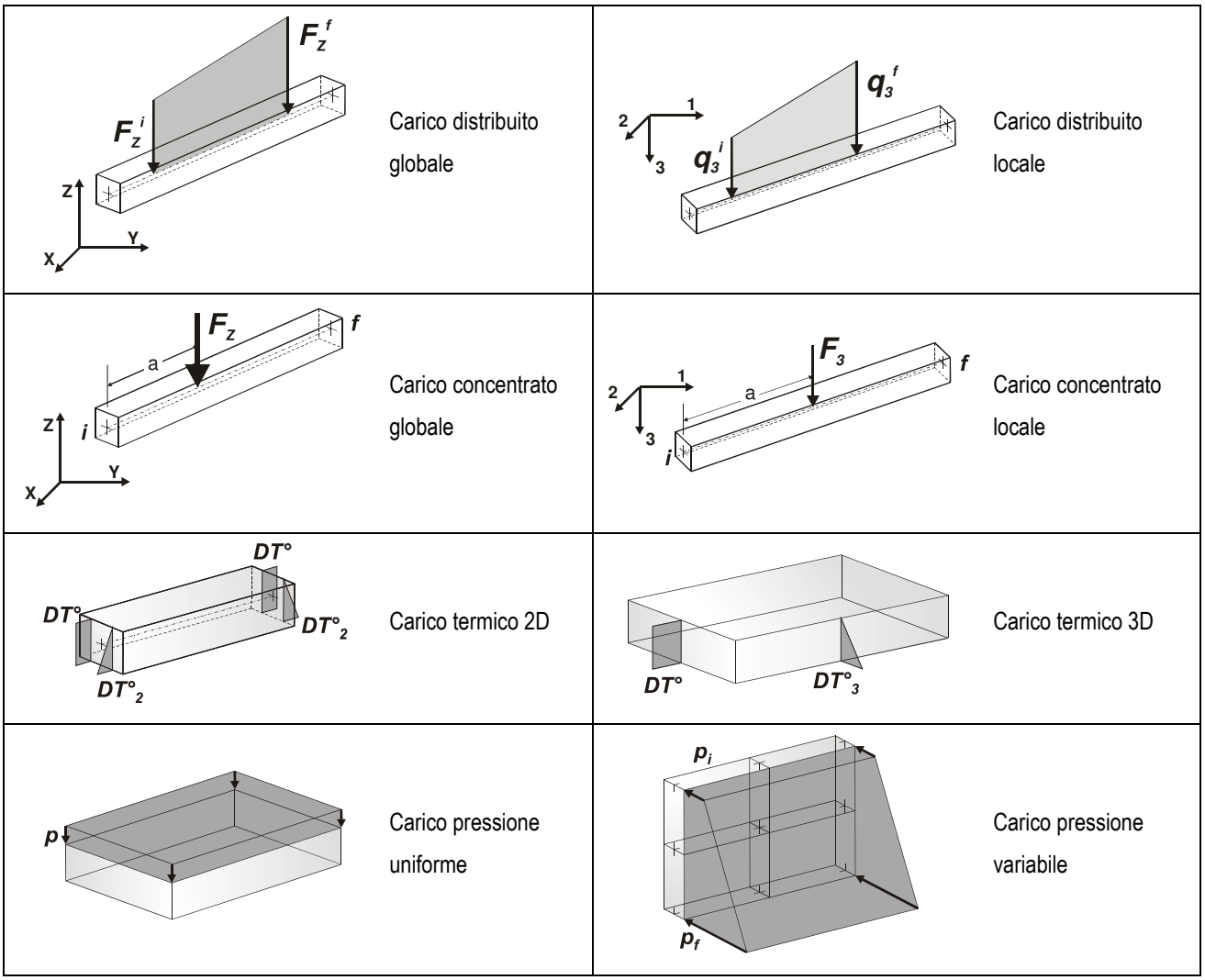

Tipo	carico di pressione uniforme su piastra

Id	Tipo	pressione
		daN/cm2
1	P3:p=2.70	2.70

SCHEMATIZZAZIONE DEI CASI DI CARICO

Il programma consente l'applicazione di diverse tipologie di casi di carico.

Sono previsti i seguenti 11 tipi di casi di carico:

	Sigla	*Tipo*	*Descrizione*
1	**Ggk**	A	caso di carico comprensivo del peso proprio struttura
2	**Gk**	NA	caso di carico con azioni permanenti
3	**Qk**	NA	caso di carico con azioni variabili
4	**Gsk**	A	caso di carico comprensivo dei carichi permanenti sui solai e sulle coperture
5	**Qsk**	A	caso di carico comprensivo dei carichi variabili sui solai
6	**Qnk**	A	caso di carico comprensivo dei carichi di neve sulle coperture
7	**Qtk**	SA	caso di carico comprensivo di una variazione termica agente sulla struttura
8	**Qvk**	NA	caso di carico comprensivo di azioni da vento sulla struttura

9	**Esk**	SA	caso di carico sismico con analisi statica equivalente
10	**Edk**	SA	caso di carico sismico con analisi dinamica
11	**Pk**	NA	caso di carico comprensivo di azioni derivanti da coazioni, cedimenti e precompressioni

Sono di tipo automatico A (ossia non prevedono introduzione dati da parte dell'utente) i seguenti casi di carico: 1-Ggk; 4-Gsk; 5-Qsk; 6-Qnk.

Sono di tipo semi-automatico SA (ossia prevedono una minima introduzione dati da parte dell'utente) i seguenti casi di carico:
7-Qtk, in quanto richiede solo il valore della variazione termica;
9-Esk e 10-Edk, in quanto richiedono il valore dell'angolo di ingresso del sisma e l'individuazione dei casi di carico partecipanti alla definizione delle masse.

Sono di tipo non automatico NA ossia prevedono la diretta applicazione di carichi generici agli elementi strutturali (si veda il precedente punto Modellazione delle Azioni) i restanti casi di carico.

Nella tabella successiva vengono riportati i casi di carico agenti sulla struttura, con l'indicazione dei dati relativi al caso di carico stesso:
Numero Tipo e *Sigla identificativa*, *Valore di riferimento* del caso di carico (se previsto).

In successione, per i casi di carico non automatici, viene riportato l'elenco di nodi ed elementi direttamente caricati con la sigla identificativa del carico.

Per i casi di carico di tipo sismico (9-Esk e 10-Edk), viene riportata la tabella di definizione delle masse: per ogni caso di carico partecipante alla definizione delle masse viene indicata la relativa aliquota (partecipazione) considerata. Si precisa che per i caso di carico 5-Qsk e 6-Qnk la partecipazione è prevista localmente per ogni elemento solaio o copertura presente nel modello (si confronti il valore Sksol nel capitolo relativo agli elementi solaio) e pertanto la loro partecipazione è di norma pari a uno.

CDC	Tipo	Sigla Id	Note
1	Ggk	CDC=Ggk (peso proprio della struttura)	
2	Edk	CDC=Ed (dinamico SLU) alfa=0.0 (ecc. +)	partecipazione:1.00 per 1 CDC=Ggk (peso proprio della struttura)
			partecipazione:1.00 per 10 CDC=G2k (permanente generico n.c.d.) .....
3	Edk	CDC=Ed (dinamico SLU) alfa=0.0 (ecc. -)	come precedente CDC sismico
4	Edk	CDC=Ed (dinamico SLU) alfa=90.00 (ecc. +)	come precedente CDC sismico
5	Edk	CDC=Ed (dinamico SLU) alfa=90.00 (ecc. -)	come precedente CDC sismico
6	Edk	CDC=Ed (dinamico SLD) alfa=0.0 (ecc. +)	come precedente CDC sismico
7	Edk	CDC=Ed (dinamico SLD) alfa=0.0 (ecc. -)	come precedente CDC sismico
8	Edk	CDC=Ed (dinamico SLD) alfa=90.00 (ecc. +)	come precedente CDC sismico
9	Edk	CDC=Ed (dinamico SLD) alfa=90.00 (ecc. -)	come precedente CDC sismico
10	Gk	CDC=G2k (permanente generico n.c.d.)	D3 :da 1 a 240 Azione : P3:p=2.70

DEFINIZIONE DELLE COMBINAZIONI

Il programma combina i diversi tipi di casi di carico (CDC) secondo le regole previste dalla normativa vigente.

Le combinazioni previste sono destinate al controllo di sicurezza della struttura ed alla verifica degli spostamenti e delle sollecitazioni.

La prima tabella delle combinazioni riportata di seguito comprende le seguenti informazioni: *Numero*, *Tipo*, *Sigla identificativa*. Una seconda tabella riporta il *peso nella combinazione*, assunto per ogni caso di carico.

Ai fini delle verifiche degli stati limite si definiscono le seguenti combinazioni delle azioni:
Combinazione fondamentale SLU

$\gamma G1 \cdot G1 + \gamma G2 \cdot G2 + \gamma P \cdot P + \gamma Q1 \cdot Qk1 + \gamma Q2 \cdot \psi 02 \cdot Qk2 + \gamma Q3 \cdot \psi 03 \cdot Qk3 + \ldots$

Combinazione caratteristica (rara) SLE

$G1 + G2 + P + Qk1 + \psi 02 \cdot Qk2 + \psi 03 \cdot Qk3 + \ldots$

Combinazione frequente SLE

$G1 + G2 + P + \psi 11 \cdot Qk1 + \psi 22 \cdot Qk2 + \psi 23 \cdot Qk3 + \ldots$

Combinazione quasi permanente SLE

$G1 + G2 + P + \psi 21 \cdot Qk1 + \psi 22 \cdot Qk2 + \psi 23 \cdot Qk3 + \ldots$

Combinazione sismica, impiegata per gli stati limite ultimi e di esercizio connessi all'azione sismica E

$E + G1 + G2 + P + \psi 21 \cdot Qk1 + \psi 22 \cdot Qk2 + \ldots$

Combinazione eccezionale, impiegata per gli stati limite connessi alle azioni eccezionali

$G1 + G2 + P + \psi 21 \cdot Qk1 + \psi 22 \cdot Qk2 + \ldots$

Dove:

NTC 2008 Tabella 2.5.I

Destinazione d'uso/azione	ψ0	ψ1	ψ2
Categoria A residenziali	0,70	0,50	0,30
Categoria B uffici	0,70	0,50	0,30
Categoria C ambienti suscettibili di affollamento	0,70	0,70	0,60
Categoria D ambienti ad uso commerciale	0,70	0,70	0,60
Categoria E biblioteche, archivi, magazzini,…	1,00	0,90	0,80
Categoria F Rimesse e parcheggi (autoveicoli <= 30kN)	0,70	0,70	0,60
Categoria G Rimesse e parcheggi (autoveicoli > 30kN)	0,70	0,50	0,30
Categoria H Coperture	0,00	0,00	0,00
Vento	0,60	0,20	0,00
Neve a quota <= 1000 m	0,50	0,20	0,00
Neve a quota > 1000 m	0,70	0,50	0,20
Variazioni Termiche	0,60	0,50	0,00

Nelle verifiche possono essere adottati in alternativa, due diversi approcci progettuali:
- per l'approccio 1 si considerano due diverse combinazioni di gruppi di coefficienti di sicurezza parziali per le azioni, per i materiali e per la resistenza globale (combinazione 1 con coefficienti A1 e combinazione 2 con coefficienti A2),
- per l'approccio 2 si definisce un'unica combinazione per le azioni, per la resistenza dei materiali e per la resistenza globale (con coefficienti A1).

NTC 2008 Tabella 2.6.I

		Coefficiente γf	EQU	A1	A2
Carichi permanenti	Favorevoli	γG1	0,9	1,0	1,0
	Sfavorevoli		1,1	1,3	1,0
Carichi permanenti non strutturali (Non compiutamente definiti)	Favorevoli	γG2	0,0	0,0	0,0
	Sfavorevoli		1,5	1,5	1,3
Carichi variabili	Favorevoli	γQi	0,0	0,0	0,0
	Sfavorevoli		1,5	1,5	1,3

Cmb	Tipo	Sigla Id	effetto P-delta
1	SLU	Comb. SLU A1 1	
2	SLU	Comb. SLU A1 2	
3	SLE(r)	Comb. SLE(rara) 3	
4	SLU	Comb. SLU A1 (SLV sism.) 4	
5	SLU	Comb. SLU A1 (SLV sism.) 5	
6	SLU	Comb. SLU A1 (SLV sism.) 6	
7	SLU	Comb. SLU A1 (SLV sism.) 7	
8	SLU	Comb. SLU A1 (SLV sism.) 8	
9	SLU	Comb. SLU A1 (SLV sism.) 9	
10	SLU	Comb. SLU A1 (SLV sism.) 10	
11	SLU	Comb. SLU A1 (SLV sism.) 11	
12	SLD(sis)	Comb. SLE (SLD Danno sism.) 12	
13	SLD(sis)	Comb. SLE (SLD Danno sism.) 13	
14	SLD(sis)	Comb. SLE (SLD Danno sism.) 14	
15	SLD(sis)	Comb. SLE (SLD Danno sism.) 15	
16	SLD(sis)	Comb. SLE (SLD Danno sism.) 16	
17	SLD(sis)	Comb. SLE (SLD Danno sism.) 17	
18	SLD(sis)	Comb. SLE (SLD Danno sism.) 18	
19	SLD(sis)	Comb. SLE (SLD Danno sism.) 19	
20	SLE(f)	Comb. SLE(freq.) 20	
21	SLU(acc.)	Comb. SLU (Accid.) 21	
22	SLE(p)	Comb. SLE(perm.) 22	

Cmb	CDC 1/15...	CDC 2/16...	CDC 3/17...	CDC 4/18...	CDC 5/19...	CDC 6/20...	CDC 7/21...	CDC 8/22...	CDC 9/23...	CDC 10/24...	CDC 11/25...	CDC 12/26...	CDC 13/27...	CDC 14/28...
1	1.30	0.0	0.0	0.0	0.0	0.0	0.0	0.0	0.0	1.50				
2	1.00	0.0	0.0	0.0	0.0	0.0	0.0	0.0	0.0	0.0				
3	1.00	0.0	0.0	0.0	0.0	0.0	0.0	0.0	0.0	1.00				
4	1.00	-1.00	0.0	0.0	0.0	0.0	0.0	0.0	0.0	1.00				
5	1.00	1.00	0.0	0.0	0.0	0.0	0.0	0.0	0.0	1.00				
6	1.00	0.0	-1.00	0.0	0.0	0.0	0.0	0.0	0.0	1.00				
7	1.00	0.0	1.00	0.0	0.0	0.0	0.0	0.0	0.0	1.00				
8	1.00	0.0	0.0	-1.00	0.0	0.0	0.0	0.0	0.0	1.00				
9	1.00	0.0	0.0	1.00	0.0	0.0	0.0	0.0	0.0	1.00				
10	1.00	0.0	0.0	0.0	-1.00	0.0	0.0	0.0	0.0	1.00				
11	1.00	0.0	0.0	0.0	1.00	0.0	0.0	0.0	0.0	1.00				
12	1.00	0.0	0.0	0.0	0.0	-1.00	0.0	0.0	0.0	1.00				
13	1.00	0.0	0.0	0.0	0.0	1.00	0.0	0.0	0.0	1.00				
14	1.00	0.0	0.0	0.0	0.0	0.0	-1.00	0.0	0.0	1.00				
15	1.00	0.0	0.0	0.0	0.0	0.0	1.00	0.0	0.0	1.00				
16	1.00	0.0	0.0	0.0	0.0	0.0	0.0	-1.00	0.0	1.00				
17	1.00	0.0	0.0	0.0	0.0	0.0	0.0	1.00	0.0	1.00				
18	1.00	0.0	0.0	0.0	0.0	0.0	0.0	0.0	-1.00	1.00				
19	1.00	0.0	0.0	0.0	0.0	0.0	0.0	0.0	1.00	1.00				
20	1.00	0.0	0.0	0.0	0.0	0.0	0.0	0.0	0.0	1.00				
21	1.00	0.0	0.0	0.0	0.0	0.0	0.0	0.0	0.0	1.00				
22	1.00	0.0	0.0	0.0	0.0	0.0	0.0	0.0	0.0	1.00				

AZIONE SISMICA

L'azione sismica sulle costruzioni è valutata a partire dalla "pericolosità sismica di base", in condizioni ideali di sito di riferimento rigido con superficie topografica orizzontale.

Allo stato attuale, la pericolosità sismica su reticolo di riferimento nell'intervallo di riferimento è fornita dai dati pubblicati sul sito http://esse1.mi.ingv.it/. Per punti non coincidenti con il reticolo di riferimento e periodi di ritorno non contemplati direttamente si opera come indicato nell' allegato alle NTC (rispettivamente media pesata e interpolazione).

L' azione sismica viene definita in relazione ad un periodo di riferimento Vr che si ricava, per ciascun tipo di costruzione, moltiplicandone la vita nominale per il coefficiente d'uso (vedi tabella Parametri della struttura). Fissato il periodo di riferimento Vr e la probabilità di superamento Pver associata a ciascuno degli stati limite considerati, si ottiene il periodo di ritorno Tr e i relativi parametri di pericolosità sismica (vedi tabella successiva):

ag: accelerazione orizzontale massima del terreno;

Fo: valore massimo del fattore di amplificazione dello spettro in accelerazione orizzontale;

T*c: periodo di inizio del tratto a velocità costante dello spettro in accelerazione orizzontale;

Parametri della struttura					
Classe d'uso	Vita Vn [anni]	Coeff. Uso	Periodo Vr [anni]	Tipo di suolo	Categoria topografica
IV	100.0	2.0	200.0	B	T1

Individuati su reticolo di riferimento i parametri di pericolosità sismica si valutano i parametri spettrali riportati in tabella:

S è il coefficiente che tiene conto della categoria di sottosuolo e delle condizioni topografiche

mediante la relazione seguente S = Ss*St (3.2.5)

Fo è il fattore che quantifica l'amplificazione spettrale massima, su sito di riferimento rigido orizzontale

Fv è il fattore che quantifica l'amplificazione spettrale massima verticale, in termini di accelerazione orizzontale massima del terreno ag su sito di riferimento rigido orizzontale

Tb è il periodo corrispondente all'inizio del tratto dello spettro ad accelerazione costante.

Tc è il periodo corrispondente all'inizio del tratto dello spettro a velocità costante.

Td è il periodo corrispondente all'inizio del tratto dello spettro a spostamento costante.

Id nodo	**Longitudine**	**Latitudine**	**Distanza**
			Km
Loc.	8.898	44.419	
16917	8.872	44.395	3.363
16918	8.942	44.398	4.190
16696	8.938	44.448	4.511
16695	8.868	44.445	3.734

SL	**Pver**	**Tr**	**ag**	**Fo**	**T*c**
		Anni	g		sec
SLO	81.0	120.0	0.041	2.540	0.250
SLD	63.0	201.0	0.050	2.530	0.270
SLV	10.0	1898.0	0.109	2.530	0.310
SLC	5.0	2475.0	0.119	2.530	0.310

SL	**ag**	**S**	**Fo**	**Fv**	**Tb**	**Tc**	**Td**
	g				sec	sec	sec
SLO	0.041	1.200	2.540	0.694	0.121	0.363	1.764
SLD	0.050	1.200	2.530	0.765	0.129	0.386	1.801
SLV	0.109	1.200	2.530	1.127	0.144	0.431	2.035
SLC	0.119	1.200	2.530	1.178	0.144	0.431	2.076

RISULTATI ANALISI SISMICHE

Il programma consente l'analisi di diverse configurazioni sismiche.

Sono previsti, infatti, i seguenti casi di carico:

9. Esk caso di carico sismico con analisi statica equivalente

10. Edk caso di carico sismico con analisi dinamica

Ciascun caso di carico è caratterizzato da un angolo di ingresso e da una configurazione di masse determinante la forza sismica complessiva (si rimanda al capitolo relativo ai casi di carico per chiarimenti inerenti questo aspetto).

Nella colonna Note, in funzione della norma in uso sono riportati i parametri fondamentali che caratterizzano l' azione sismica: in particolare possono essere presenti i seguenti valori:

Angolo di ingresso	Angolo di ingresso dell'azione sismica orizzontale
Fattore di importanza	Fattore di importanza dell'edificio, in base alla categoria di appartenenza
Zona sismica	Zona sismica
Accelerazione ag	Accelerazione orizzontale massima sul suolo
Categoria suolo	Categoria di profilo stratigrafico del suolo di fondazione
Fattore di struttura q	Fattore dipendente dalla tipologia strutturale
Fattore di sito S	Fattore dipendente dalla stratigrafia e dal profilo topografico
Classe di duttilità CD	Classe di duttilità della struttura – "A" duttilità alta, "B" duttilità bassa
Fattore riduz. SLD	Fattore di riduzione dello spettro elastico per lo stato limite di danno
Periodo proprio T1	Periodo proprio di vibrazione della struttura
Coefficiente Lambda	Coefficiente dipendente dal periodo proprio T1 e dal numero di piani della struttura
Ordinata spettro Sd(T1)	Valore delle ordinate dello spettro di progetto per lo stato limite ultimo, componente orizzontale (verticale Svd)
Ordinata spettro Se(T1)	Valore delle ordinate dello spettro elastico ridotta del fattore SLD per lo stato limite di danno, componente orizzontale (verticale Sve)
Ordinata spettro S (Tb-Tc)	Valore dell' ordinata dello spettro in uso nel tratto costante
numero di modi considerati	Numero di modi di vibrare della struttura considerati nell'analisi dinamica

Per ciascun caso di carico sismico viene riportato l'insieme di dati sottoriportati (le masse sono espresse in unità di forza):

a) **analisi sismica statica equivalente**:
- quota, posizione del centro di applicazione e azione orizzontale risultante, posizione del baricentro delle rigidezze, rapporto r/Ls (per strutture a nucleo), indici di regolarità e/r secondo EC8 4.2.3.2
- azione sismica complessiva

b) **analisi sismica dinamica con spettro di risposta**:
- quota, posizione del centro di massa e massa risultante, posizione del baricentro delle rigidezze, rapporto r/Ls (per strutture a nucleo) **,** indici di regolarità e/r secondo EC8 4.2.3.2
- frequenza, periodo,accelerazione spettrale, massa eccitata nelle tre direzioni globali per tutti i modi
- massa complessiva ed aliquota di massa complessiva eccitata.

Per ciascuna combinazione sismica definita SLD o SLO viene riportato il livello di deformazione etaT (dr) degli elementi strutturali verticali. Per semplicità di consultazione il livello è espresso anche in unità 1000*etaT/h da confrontare direttamente con i valori forniti nella norma (es. 5 per edifici con tamponamenti collegati rigidamente alla struttura, 10.0 per edifici con tamponamenti collegati elasticamente, 3 per edifici in muratura ordinaria, 4 per edifici in muratura armata).

Qualora si applichi il D.M. 96 (vedi NOTA sul capitolo "normativa di riferimento") l'analisi sismica dinamica può essere comprensiva di sollecitazione verticale contemporanea a quella orizzontale, nel qual caso è effettuata una sovrapposizione degli effetti in ragione della radice dei quadrati degli effetti stessi. Per ciascuna combinazione sismica - analisi effettuate con il D.M. 96 (vedi NOTA sul capitolo "normativa di riferimento") - viene riportato il livello di deformazione etaT, etaP e etaD degli elementi strutturali verticali. Per semplicità di consultazione il livello è espresso in unità 1000*etaT/h da confrontare direttamente con il valore 2 o 4 per la verifica.

Per gli edifici sismicamente isolati si riportano di seguito le verifiche condotte sui dispositivi di isolamento. Le verifiche sono effettuate secondo l' allegato 10.A dell'Ordinanza 3274 e smi. In particolare la tabella, per ogni combinazione SLU (SLC per il DM 14-01-2008) sismica riporta il codice di verifica e i valori utilizzati per la verifica: spostamento dE, area ridotta e dimensione A2, azione verticale, deformazioni di taglio dell' elastomero e tensioni nell' acciaio.

Nodo	Nodo di appoggio dell' isolatore
Cmb	Combinazione oggetto della verifica
Verif.	Codice di verifica ok – verifica positiva , NV – verifica negativa, ND – verifica non completata
dE	Spostamento relativo tra le due facce (amplificato del 20% per Ordinanza 3274 e smi) combinato con la regola del 30%
Ang fi	Angolo utilizzato per il calcolo dell' area ridotta Ar (per dispositivi circolari)
V	Azione verticale agente
Ar	Area ridotta efficace
Dim A2	Dimensione utile per il calcolo della deformazione per rotazione
Sig s	Tensione nell' inserto in acciaio
Gam c(a,s,t)	Deformazioni di taglio dell' elestomero
Vcr	Carico critico per instabilità

Affinchè la verifica sia positiva deve essere:

1) V > 0
2) Sig s < fyk
3) Gam t < 5
4) Gam s < Gam * (caratteristica dell' elastomero)
5) Gam s < 2
6) V < 0.5 Vcr

Con riferimento al **Documento di Affidabilità** "*Test di validazione del software di calcolo PRO_SAP e dei moduli aggiuntivi PRO_SAP Modulo Geotecnico, PRO_CAD nodi acciaio e PRO_MST*" - versione Maggio 2011, disponibile per il download sul sito **www.2si.it**, si segnalano i seguenti esempi applicativi:

Test N°	Titolo
23	DM 2008: SPETTRO
29	SISMICA 1000/H, SOMMA V, EFFETTO P-δ
30	ANALISI DI UN EDIFICIO CON ISOLATORI SISMICI
65	MASSE SISMICHE
70	PROGETTO DI ISOLATORI ELASTOMERICI
71	VERIFICA DI ISOLATORI ELASTOMERICI
72	VERIFICA DI ISOLATORI FRICTION PENDULUM

CDC	Tipo	Sigla Id	Note
2	Edk	CDC=Ed (dinamico SLU) alfa=0.0 (ecc. +)	
			categoria suolo: B
			fattore di sito S = 1.200
			ordinata spettro (tratto Tb-Tc) = 0.330 g
			angolo di ingresso:0.0
			eccentricità aggiuntiva: positiva
			periodo proprio T1: 0.130 sec.
			fattore di struttura q: 1.000
			fattore per spost. mu d: 1.000
			classe di duttilità CD: B
			numero di modi considerati: 9
			combinaz. modale: CQC

Quota	M Sismica x g	Pos. GX	Pos. GY	E agg. X-X	E agg. Y-Y	Pos. KX	Pos. KY	rapp. r/Ls	rapp. ex/rx	rapp. ey/ry
cm	daN	cm	cm	cm	cm	cm	cm			
618.50	148.44	150.00	0.0	0.0	-1.00	0.0	0.0	0.0	0.0	0.0
609.12	707.96	150.00	0.0	0.0	-8.00	0.0	0.0	0.0	0.0	0.0
583.50	888.90	150.00	0.0	0.0	-13.12	0.0	0.0	0.0	0.0	0.0
548.50	2722.98	150.00	0.0	0.0	-15.00	150.00	0.0	1.484	0.0	0.0
339.25	4601.63	150.00	0.0	0.0	-15.00	150.00	0.0	1.484	0.0	0.0
130.00	2722.98	150.00	0.0	0.0	-15.00	0.0	0.0	0.0	0.0	0.0
95.00	949.72	150.00	0.0	0.0	-13.12	119.73	24.07	1.295	0.202	0.173
69.38	707.96	150.00	0.0	0.0	-8.00	0.0	0.0	0.0	0.0	0.0
60.00	148.44	150.00	0.0	0.0	-1.00	0.0	0.0	0.0	0.0	0.0
2.22e-04	40.55	103.60	46.40	0.0	-8.04	0.0	0.0	0.0	0.0	0.0
Risulta	1.364e+04									

Modo	Frequenza	Periodo	Acc. Spettrale	M efficace X x g	%	M efficace Y x g	%	M efficace Z x g	%	Energia	Energia x v
	Hz	sec	g	daN		daN		daN			
1	6.821	0.147	0.330	2899.79	21.3	16.44	0.1	3.36e-05	0.0	0.0	0.0
2	7.462	0.134	0.316	351.06	2.6	1.305e+04	95.7	6.58e-06	0.0	0.0	0.0
3	7.679	0.130	0.311	1.017e+04	74.6	360.93	2.6	2.83e-04	2.07e-06	0.0	0.0
4	30.820	0.032	0.176	39.12	0.3	159.82	1.2	2.85e-06	0.0	0.0	0.0
5	30.935	0.032	0.175	166.79	1.2	40.61	0.3	1.29e-03	9.46e-06	0.0	0.0
6	63.733	0.016	0.152	2.56e-04	1.88e-06	8.89e-05	0.0	1.296e+04	95.0	0.0	0.0
7	69.865	0.014	0.150	2.65e-04	1.94e-06	8.71e-05	0.0	1.64	1.20e-02	0.0	0.0
8	69.921	0.014	0.150	6.44e-06	0.0	1.09e-03	7.99e-06	87.43	0.6	0.0	0.0
9	73.491	0.014	0.149	3.46e-05	0.0	4.80e-05	0.0	0.35	2.56e-03	0.0	0.0
Risulta				1.363e+04		1.363e+04		1.305e+04			
In percentuale				99.93		99.94		95.67			

CDC	Tipo	Sigla Id	Note
3	Edk	CDC=Ed (dinamico SLU) alfa=0.0 (ecc. -)	
			categoria suolo: B
			fattore di sito S = 1.200
			ordinata spettro (tratto Tb-Tc) = 0.330 g
			angolo di ingresso:0.0
			eccentricità aggiuntiva: negativa
			periodo proprio T1: 0.130 sec.
			fattore di struttura q: 1.000
			fattore per spost. mu d: 1.000
			classe di duttilità CD: B
			numero di modi considerati: 9
			combinaz. modale: CQC

Quota	M Sismica x g	Pos. GX	Pos. GY	E agg. X-X	E agg. Y-Y	Pos. KX	Pos. KY	rapp. r/Ls	rapp. ex/rx	rapp. ey/ry
cm	daN	cm	cm	cm	cm	cm	cm			
618.50	148.44	150.00	0.0	0.0	1.00	0.0	0.0	0.0	0.0	0.0
609.12	707.96	150.00	0.0	0.0	8.00	0.0	0.0	0.0	0.0	0.0
583.50	888.90	150.00	0.0	0.0	13.12	0.0	0.0	0.0	0.0	0.0
548.50	2722.98	150.00	0.0	0.0	15.00	150.00	0.0	1.484	0.0	0.0
339.25	4601.63	150.00	0.0	0.0	15.00	150.00	0.0	1.484	0.0	0.0
130.00	2722.98	150.00	0.0	0.0	15.00	0.0	0.0	0.0	0.0	0.0
95.00	949.72	150.00	0.0	0.0	13.12	119.73	24.07	1.295	0.202	0.173
69.38	707.96	150.00	0.0	0.0	8.00	0.0	0.0	0.0	0.0	0.0
60.00	148.44	150.00	0.0	0.0	1.00	0.0	0.0	0.0	0.0	0.0
2.22e-04	40.55	103.60	46.40	0.0	8.04	0.0	0.0	0.0	0.0	0.0
Risulta	1.364e+04									

Modo	Frequenza	Periodo	Acc. Spettrale	M efficace X x g	%	M efficace Y x g	%	M efficace Z x g	%	Energia	Energia x v
	Hz	sec	g	daN		daN		daN			
1	6.777	0.148	0.330	3354.67	24.6	45.98	0.3	1.41e-04	1.03e-06	0.0	0.0
2	7.469	0.134	0.316	3.80	2.79e-02	1.338e+04	98.1	3.25e-05	0.0	0.0	0.0
3	7.718	0.130	0.310	1.007e+04	73.8	2.59	1.90e-02	4.06e-05	0.0	0.0	0.0
4	30.819	0.032	0.176	41.46	0.3	157.78	1.2	1.27e-05	0.0	0.0	0.0
5	30.932	0.032	0.175	164.97	1.2	42.64	0.3	1.10e-03	8.03e-06	0.0	0.0
6	63.732	0.016	0.152	2.70e-04	1.98e-06	3.45e-05	0.0	1.295e+04	95.0	0.0	0.0
7	69.844	0.014	0.150	1.16e-03	8.47e-06	3.66e-05	0.0	1.22	8.93e-03	0.0	0.0
8	69.938	0.014	0.150	7.83e-05	0.0	6.00e-04	4.40e-06	89.36	0.7	0.0	0.0
9	73.491	0.014	0.149	9.65e-05	0.0	8.51e-05	0.0	0.51	3.74e-03	0.0	0.0
Risulta				1.363e+04		1.363e+04		1.304e+04			
In percentuale				99.94		99.94		95.64			

CDC	Tipo	Sigla Id	Note
4	Edk	CDC=Ed (dinamico SLU) alfa=90.00 (ecc. +)	
			categoria suolo: B
			fattore di sito S = 1.200
			ordinata spettro (tratto Tb-Tc) = 0.330 g
			angolo di ingresso:90.00
			eccentricità aggiuntiva: positiva
			periodo proprio T1: 0.130 sec.
			fattore di struttura q: 1.000
			fattore per spost. mu d: 1.000
			classe di duttilità CD: B
			numero di modi considerati: 9
			combinaz. modale: CQC

Quota	M Sismica x g	Pos. GX	Pos. GY	E agg. X-X	E agg. Y-Y	Pos. KX	Pos. KY	rapp. r/Ls	rapp. ex/rx	rapp. ey/ry
cm	daN	cm	cm	cm	cm	cm	cm			
618.50	148.44	150.00	0.0	1.00	0.0	0.0	0.0	0.0	0.0	0.0
609.12	707.96	150.00	0.0	8.00	0.0	0.0	0.0	0.0	0.0	0.0
583.50	888.90	150.00	0.0	13.12	0.0	0.0	0.0	0.0	0.0	0.0
548.50	2722.98	150.00	0.0	15.00	0.0	150.00	0.0	1.484	0.0	0.0

Quota	M Sismica x g	Pos. GX	Pos. GY	E agg. X-X	E agg. Y-Y	Pos. KX	Pos. KY	rapp. r/Ls	rapp. ex/rx	rapp. ey/ry
339.25	4601.63	150.00	0.0	15.00	0.0	150.00	0.0	1.484	0.0	0.0
130.00	2722.98	150.00	0.0	15.00	0.0	0.0	0.0	0.0	0.0	0.0
95.00	949.72	150.00	0.0	13.12	0.0	119.73	24.07	1.295	0.202	0.173
69.38	707.96	150.00	0.0	8.00	0.0	0.0	0.0	0.0	0.0	0.0
60.00	148.44	150.00	0.0	1.00	0.0	0.0	0.0	0.0	0.0	0.0
2.22e-04	40.55	103.60	46.40	8.04	0.0	0.0	0.0	0.0	0.0	0.0
Risulta	1.364e+04									

Modo	Frequenza	Periodo	Acc. Spettrale	M efficace X x g	%	M efficace Y x g	%	M efficace Z x g	%	Energia	Energia x v
	Hz	sec	g	daN		daN		daN			
1	6.768	0.148	0.330	29.54	0.2	3554.22	26.1	3.31e-05	0.0	0.0	0.0
2	7.498	0.133	0.316	1.339e+04	98.1	9.81e-04	7.19e-06	1.18e-04	0.0	0.0	0.0
3	7.702	0.130	0.311	10.47	7.68e-02	9875.58	72.4	8.38e-05	0.0	0.0	0.0
4	30.822	0.032	0.176	41.44	0.3	157.58	1.2	0.0	0.0	0.0	0.0
5	30.934	0.032	0.175	164.52	1.2	42.88	0.3	9.89e-04	7.25e-06	0.0	0.0
6	63.733	0.016	0.152	1.96e-04	1.44e-06	4.65e-05	0.0	1.296e+04	95.0	0.0	0.0
7	69.865	0.014	0.150	1.09e-05	0.0	4.00e-04	2.93e-06	1.71	1.26e-02	0.0	0.0
8	69.921	0.014	0.150	1.09e-03	7.98e-06	2.93e-05	0.0	87.47	0.6	0.0	0.0
9	73.490	0.014	0.149	4.61e-06	0.0	1.03e-04	0.0	0.35	2.60e-03	0.0	0.0
Risulta				1.363e+04		1.363e+04		1.305e+04			
In percentuale				99.94		99.93		95.67			

CDC	Tipo	Sigla Id	Note
5	Edk	CDC=Ed (dinamico SLU) alfa=90.00 (ecc. -)	
			categoria suolo: B
			fattore di sito S = 1.200
			ordinata spettro (tratto Tb-Tc) = 0.330 g
			angolo di ingresso:90.00
			eccentricità aggiuntiva: negativa
			periodo proprio T1: 0.131 sec.
			fattore di struttura q: 1.000
			fattore per spost. mu d: 1.000
			classe di duttilità CD: B
			numero di modi considerati: 9
			combinaz. modale: CQC

Quota	M Sismica x g	Pos. GX	Pos. GY	E agg. X-X	E agg. Y-Y	Pos. KX	Pos. KY	rapp. r/Ls	rapp. ex/rx	rapp. ey/ry
cm	daN	cm	cm	cm	cm	cm	cm			
618.50	148.44	150.00	0.0	-1.00	0.0	0.0	0.0	0.0	0.0	0.0
609.12	707.96	150.00	0.0	-8.00	0.0	0.0	0.0	0.0	0.0	0.0
583.50	888.90	150.00	0.0	-13.12	0.0	0.0	0.0	0.0	0.0	0.0
548.50	2722.98	150.00	0.0	-15.00	0.0	150.00	0.0	1.484	0.0	0.0
339.25	4601.63	150.00	0.0	-15.00	0.0	150.00	0.0	1.484	0.0	0.0
130.00	2722.98	150.00	0.0	-15.00	0.0	0.0	0.0	0.0	0.0	0.0
95.00	949.72	150.00	0.0	-13.12	0.0	119.73	24.07	1.295	0.202	0.173
69.38	707.96	150.00	0.0	-8.00	0.0	0.0	0.0	0.0	0.0	0.0
60.00	148.44	150.00	0.0	-1.00	0.0	0.0	0.0	0.0	0.0	0.0
2.22e-04	40.55	103.60	46.40	-8.04	0.0	0.0	0.0	0.0	0.0	0.0
Risulta	1.364e+04									

Modo	Frequenza	Periodo	Acc. Spettrale	M efficace X x g	%	M efficace Y x g	%	M efficace Z x g	%	Energia	Energia x v
	Hz	sec	g	daN		daN		daN			
1	6.821	0.147	0.330	7.42	5.44e-02	3001.21	22.0	1.55e-04	1.14e-06	0.0	0.0
2	7.490	0.134	0.316	1.281e+04	93.9	529.76	3.9	1.21e-04	0.0	0.0	0.0
3	7.648	0.131	0.312	606.41	4.4	9899.57	72.6	2.04e-06	0.0	0.0	0.0
4	30.817	0.032	0.176	39.28	0.3	160.13	1.2	5.06e-06	0.0	0.0	0.0
5	30.934	0.032	0.175	166.68	1.2	40.68	0.3	1.30e-03	9.54e-06	0.0	0.0
6	63.732	0.016	0.152	2.90e-04	2.13e-06	5.11e-05	0.0	1.295e+04	95.0	0.0	0.0
7	69.844	0.014	0.150	1.85e-04	1.36e-06	1.47e-03	1.08e-05	1.26	9.20e-03	0.0	0.0
8	69.937	0.014	0.150	2.89e-04	2.12e-06	7.68e-06	0.0	89.19	0.7	0.0	0.0
9	73.491	0.014	0.149	4.50e-05	0.0	3.86e-05	0.0	0.51	3.72e-03	0.0	0.0
Risulta				1.363e+04		1.363e+04		1.304e+04			
In percentuale				99.94		99.94		95.64			

CDC	Tipo	Sigla Id	Note
6	Edk	CDC=Ed (dinamico SLD) alfa=0.0 (ecc. +)	
			categoria suolo: B
			fattore di sito S = 1.200
			ordinata spettro (tratto Tb-Tc) = 0.152 g
			angolo di ingresso:0.0
			eccentricità aggiuntiva: positiva
			periodo proprio T1: 0.130 sec.
			numero di modi considerati: 9
			combinaz. modale: CQC

Quota	M Sismica x g	Pos. GX	Pos. GY	E agg. X-X	E agg. Y-Y	Pos. KX	Pos. KY	rapp. r/Ls	rapp. ex/rx	rapp. ey/ry
cm	daN	cm	cm	cm	cm	cm	cm			
618.50	148.44	150.00	0.0	0.0	-1.00	0.0	0.0	0.0	0.0	0.0
609.12	707.96	150.00	0.0	0.0	-8.00	0.0	0.0	0.0	0.0	0.0
583.50	888.90	150.00	0.0	0.0	-13.12	0.0	0.0	0.0	0.0	0.0
548.50	2722.98	150.00	0.0	0.0	-15.00	150.00	0.0	1.484	0.0	0.0
339.25	4601.63	150.00	0.0	0.0	-15.00	150.00	0.0	1.484	0.0	0.0
130.00	2722.98	150.00	0.0	0.0	-15.00	0.0	0.0	0.0	0.0	0.0
95.00	949.72	150.00	0.0	0.0	-13.12	119.73	24.07	1.295	0.202	0.173
69.38	707.96	150.00	0.0	0.0	-8.00	0.0	0.0	0.0	0.0	0.0
60.00	148.44	150.00	0.0	0.0	-1.00	0.0	0.0	0.0	0.0	0.0
2.22e-04	40.55	103.60	46.40	0.0	-8.04	0.0	0.0	0.0	0.0	0.0
Risulta	1.364e+04									

Modo	Frequenza	Periodo	Acc. Spettrale	M efficace X x g	%	M efficace Y x g	%	M efficace Z x g	%	Energia	Energia x v
	Hz	sec	g	daN		daN		daN			
1	6.821	0.147	0.152	2899.79	21.3	16.44	0.1	3.36e-05	0.0	0.0	0.0
2	7.462	0.134	0.152	351.06	2.6	1.305e+04	95.7	6.58e-06	0.0	0.0	0.0
3	7.679	0.130	0.152	1.017e+04	74.6	360.93	2.6	2.83e-04	2.07e-06	0.0	0.0
4	30.820	0.032	0.083	39.12	0.3	159.82	1.2	2.85e-06	0.0	0.0	0.0
5	30.935	0.032	0.083	166.79	1.2	40.61	0.3	1.29e-03	9.46e-06	0.0	0.0
6	63.733	0.016	0.071	2.56e-04	1.88e-06	8.89e-05	0.0	1.296e+04	95.0	0.0	0.0
7	69.865	0.014	0.070	2.65e-04	1.94e-06	8.71e-05	0.0	1.64	1.20e-02	0.0	0.0
8	69.921	0.014	0.070	6.44e-06	0.0	1.09e-03	7.99e-06	87.43	0.6	0.0	0.0
9	73.491	0.014	0.070	3.46e-05	0.0	4.80e-05	0.0	0.35	2.56e-03	0.0	0.0
Risulta				1.363e+04		1.363e+04		1.305e+04			
In percentuale				99.93		99.94		95.67			

CDC	Tipo	Sigla Id	Note
7	Edk	CDC=Ed (dinamico SLD) alfa=0.0 (ecc. -)	
			categoria suolo: B
			fattore di sito S = 1.200
			ordinata spettro (tratto Tb-Tc) = 0.152 g
			angolo di ingresso:0.0
			eccentricità aggiuntiva: negativa
			periodo proprio T1: 0.130 sec.
			numero di modi considerati: 9
			combinaz. modale: CQC

Quota	M Sismica x g	Pos. GX	Pos. GY	E agg. X-X	E agg. Y-Y	Pos. KX	Pos. KY	rapp. r/Ls	rapp. ex/rx	rapp. ey/ry
cm	daN	cm	cm	cm	cm	cm	cm			
618.50	148.44	150.00	0.0	0.0	1.00	0.0	0.0	0.0	0.0	0.0
609.12	707.96	150.00	0.0	0.0	8.00	0.0	0.0	0.0	0.0	0.0
583.50	888.90	150.00	0.0	0.0	13.12	0.0	0.0	0.0	0.0	0.0
548.50	2722.98	150.00	0.0	0.0	15.00	150.00	0.0	1.484	0.0	0.0
339.25	4601.63	150.00	0.0	0.0	15.00	150.00	0.0	1.484	0.0	0.0
130.00	2722.98	150.00	0.0	0.0	15.00	0.0	0.0	0.0	0.0	0.0
95.00	949.72	150.00	0.0	0.0	13.12	119.73	24.07	1.295	0.202	0.173
69.38	707.96	150.00	0.0	0.0	8.00	0.0	0.0	0.0	0.0	0.0
60.00	148.44	150.00	0.0	0.0	1.00	0.0	0.0	0.0	0.0	0.0
2.22e-04	40.55	103.60	46.40	0.0	8.04	0.0	0.0	0.0	0.0	0.0
Risulta	1.364e+04									

Modo	Frequenza	Periodo	Acc. Spettrale	M efficace X x g	%	M efficace Y x g	%	M efficace Z x g	%	Energia	Energia x v
	Hz	sec	g	daN		daN		daN			
1	6.777	0.148	0.152	3354.67	24.6	45.98	0.3	1.41e-04	1.03e-06	0.0	0.0
2	7.469	0.134	0.152	3.80	2.79e-02	1.338e+04	98.1	3.25e-05	0.0	0.0	0.0
3	7.718	0.130	0.152	1.007e+04	73.8	2.59	1.90e-02	4.06e-05	0.0	0.0	0.0
4	30.819	0.032	0.083	41.46	0.3	157.78	1.2	1.27e-05	0.0	0.0	0.0
5	30.932	0.032	0.083	164.97	1.2	42.64	0.3	1.10e-03	8.03e-06	0.0	0.0
6	63.732	0.016	0.071	2.70e-04	1.98e-06	3.45e-05	0.0	1.295e+04	95.0	0.0	0.0
7	69.844	0.014	0.070	1.16e-03	8.47e-06	3.66e-05	0.0	1.22	8.93e-03	0.0	0.0
8	69.938	0.014	0.070	7.83e-05	0.0	6.00e-04	4.40e-06	89.36	0.7	0.0	0.0
9	73.491	0.014	0.070	9.65e-05	0.0	8.51e-05	0.0	0.51	3.74e-03	0.0	0.0
Risulta				1.363e+04		1.363e+04		1.304e+04			
In percentuale				99.94		99.94		95.64			

CDC	Tipo	Sigla Id	Note
8	Edk	CDC=Ed (dinamico SLD) alfa=90.00 (ecc. +)	
			categoria suolo: B
			fattore di sito S = 1.200
			ordinata spettro (tratto Tb-Tc) = 0.152 g
			angolo di ingresso:90.00
			eccentricità aggiuntiva: positiva
			periodo proprio T1: 0.130 sec.
			numero di modi considerati: 9
			combinaz. modale: CQC

Quota	M Sismica x g	Pos. GX	Pos. GY	E agg. X-X	E agg. Y-Y	Pos. KX	Pos. KY	rapp. r/Ls	rapp. ex/rx	rapp. ey/ry
cm	daN	cm	cm	cm	cm	cm	cm			
618.50	148.44	150.00	0.0	1.00	0.0	0.0	0.0	0.0	0.0	0.0
609.12	707.96	150.00	0.0	8.00	0.0	0.0	0.0	0.0	0.0	0.0
583.50	888.90	150.00	0.0	13.12	0.0	0.0	0.0	0.0	0.0	0.0
548.50	2722.98	150.00	0.0	15.00	0.0	150.00	0.0	1.484	0.0	0.0
339.25	4601.63	150.00	0.0	15.00	0.0	150.00	0.0	1.484	0.0	0.0
130.00	2722.98	150.00	0.0	15.00	0.0	0.0	0.0	0.0	0.0	0.0
95.00	949.72	150.00	0.0	13.12	0.0	119.73	24.07	1.295	0.202	0.173
69.38	707.96	150.00	0.0	8.00	0.0	0.0	0.0	0.0	0.0	0.0
60.00	148.44	150.00	0.0	1.00	0.0	0.0	0.0	0.0	0.0	0.0
2.22e-04	40.55	103.60	46.40	8.04	0.0	0.0	0.0	0.0	0.0	0.0
Risulta	1.364e+04									

Modo	Frequenza	Periodo	Acc. Spettrale	M efficace X x g	%	M efficace Y x g	%	M efficace Z x g	%	Energia	Energia x v
	Hz	sec	g	daN		daN		daN			
1	6.768	0.148	0.152	29.54	0.2	3554.22	26.1	3.31e-05	0.0	0.0	0.0
2	7.498	0.133	0.152	1.339e+04	98.1	9.81e-04	7.19e-06	1.18e-04	0.0	0.0	0.0
3	7.702	0.130	0.152	10.47	7.68e-02	9875.58	72.4	8.38e-05	0.0	0.0	0.0
4	30.822	0.032	0.083	41.44	0.3	157.58	1.2	0.0	0.0	0.0	0.0
5	30.934	0.032	0.083	164.52	1.2	42.88	0.3	9.89e-04	7.25e-06	0.0	0.0
6	63.733	0.016	0.071	1.96e-04	1.44e-06	4.65e-05	0.0	1.296e+04	95.0	0.0	0.0
7	69.865	0.014	0.070	1.09e-05	0.0	4.00e-04	2.93e-06	1.71	1.26e-02	0.0	0.0
8	69.921	0.014	0.070	1.09e-03	7.98e-06	2.93e-05	0.0	87.47	0.6	0.0	0.0
9	73.490	0.014	0.070	4.61e-06	0.0	1.03e-04	0.0	0.35	2.60e-03	0.0	0.0
Risulta				1.363e+04		1.363e+04		1.305e+04			
In percentuale				99.94		99.93		95.67			

CDC	Tipo	Sigla Id	Note
9	Edk	CDC=Ed (dinamico SLD) alfa=90.00 (ecc. -)	
			categoria suolo: B
			fattore di sito S = 1.200
			ordinata spettro (tratto Tb-Tc) = 0.152 g
			angolo di ingresso:90.00
			eccentricità aggiuntiva: negativa
			periodo proprio T1: 0.131 sec.
			numero di modi considerati: 9
			combinaz. modale: CQC

Quota	M Sismica x g	Pos. GX	Pos. GY	E agg. X-X	E agg. Y-Y	Pos. KX	Pos. KY	rapp. r/Ls	rapp. ex/rx	rapp. ey/ry
cm	daN	cm	cm	cm	cm	cm	cm			
618.50	148.44	150.00	0.0	-1.00	0.0	0.0	0.0	0.0	0.0	0.0
609.12	707.96	150.00	0.0	-8.00	0.0	0.0	0.0	0.0	0.0	0.0
583.50	888.90	150.00	0.0	-13.12	0.0	0.0	0.0	0.0	0.0	0.0
548.50	2722.98	150.00	0.0	-15.00	0.0	150.00	0.0	1.484	0.0	0.0
339.25	4601.63	150.00	0.0	-15.00	0.0	150.00	0.0	1.484	0.0	0.0
130.00	2722.98	150.00	0.0	-15.00	0.0	0.0	0.0	0.0	0.0	0.0
95.00	949.72	150.00	0.0	-13.12	0.0	119.73	24.07	1.295	0.202	0.173
69.38	707.96	150.00	0.0	-8.00	0.0	0.0	0.0	0.0	0.0	0.0
60.00	148.44	150.00	0.0	-1.00	0.0	0.0	0.0	0.0	0.0	0.0
2.22e-04	40.55	103.60	46.40	-8.04	0.0	0.0	0.0	0.0	0.0	0.0
Risulta	1.364e+04									

Modo	Frequenza	Periodo	Acc. Spettrale	M efficace X x g	%	M efficace Y x g	%	M efficace Z x g	%	Energia	Energia x v
	Hz	sec	g	daN		daN		daN			
1	6.821	0.147	0.152	7.42	5.44e-02	3001.21	22.0	1.55e-04	1.14e-06	0.0	0.0
2	7.490	0.134	0.152	1.281e+04	93.9	529.76	3.9	1.21e-04	0.0	0.0	0.0
3	7.648	0.131	0.152	606.41	4.4	9899.57	72.6	2.04e-06	0.0	0.0	0.0
4	30.817	0.032	0.083	39.28	0.3	160.13	1.2	5.06e-06	0.0	0.0	0.0
5	30.934	0.032	0.083	166.68	1.2	40.68	0.3	1.30e-03	9.54e-06	0.0	0.0
6	63.732	0.016	0.071	2.90e-04	2.13e-06	5.11e-05	0.0	1.295e+04	95.0	0.0	0.0
7	69.844	0.014	0.070	1.85e-04	1.36e-06	1.47e-03	1.08e-05	1.26	9.20e-03	0.0	0.0
8	69.937	0.014	0.070	2.89e-04	2.12e-06	7.68e-06	0.0	89.19	0.7	0.0	0.0
9	73.491	0.014	0.070	4.50e-05	0.0	3.86e-05	0.0	0.51	3.72e-03	0.0	0.0
Risulta				1.363e+04		1.363e+04		1.304e+04			
In percentuale				99.94		99.94		95.64			

Cmb	Pilas.	1000 etaT/h	etaT	inter. h	Pilas.	1000 etaT/h	etaT	inter. h	Pilas.	1000 etaT/h	etaT	inter. h
			cm	cm			cm	cm			cm	cm
12	1	0.20	0.02	95.0	2	0.20	0.02	95.0	3	0.36	0.03	95.0
13	1	0.21	0.02	95.0	2	0.27	0.03	95.0	3	0.25	0.02	95.0
14	1	0.19	0.02	95.0	2	0.19	0.02	95.0	3	0.37	0.03	95.0
15	1	0.18	0.02	95.0	2	0.29	0.03	95.0	3	0.24	0.02	95.0
16	1	0.25	0.02	95.0	2	0.27	0.03	95.0	3	0.22	0.02	95.0
17	1	0.37	0.04	95.0	2	0.20	0.02	95.0	3	0.19	0.02	95.0
18	1	0.26	0.02	95.0	2	0.31	0.03	95.0	3	0.20	0.02	95.0
19	1	0.38	0.04	95.0	2	0.21	0.02	95.0	3	0.17	0.02	95.0

Cmb	1000 etaT/h
	0.38

RISULTATI NODALI

Il controllo dei risultati delle analisi condotte, per quanto concerne i nodi strutturali, è possibile in relazione alle tabelle sottoriportate.

Una prima tabella riporta infatti per ogni nodo e per ogni combinazione (o caso di carico) gli spostamenti nodali.

Una seconda tabella riporta per ogni nodo a cui sia associato un vincolo rigido e/o elastico o una fondazione speciale e per ogni combinazione (o caso di carico) i valori delle azioni esercitate dalla struttura sui vincoli (reazioni vincolari cambiate di segno).

Una terza tabella, infine riassume per ogni nodo le sei combinazioni in cui si attingono i valori minimi e massimi della reazione Fz, della reazione Mx e della reazione My.

Nodo	Cmb	Traslazione X	Traslazione Y	Traslazione Z	Rotazione X	Rotazione Y	Rotazione Z
		cm	cm	cm			
1	1	1.53e-03	1.72e-04	-0.07	0.0	-1.79e-03	-4.26e-06
1	2	-6.90e-05	-1.84e-05	-7.33e-03	0.0	-1.19e-05	1.58e-06
1	3	1.01e-03	1.13e-04	-0.05	0.0	-1.19e-03	-2.63e-06
1	4	0.10	7.79e-03	-0.05	5.52e-05	-1.09e-03	4.93e-04
1	5	-0.10	-7.57e-03	-0.05	-5.53e-05	-1.29e-03	-4.98e-04
1	6	0.10	-9.52e-03	-0.05	5.00e-05	-1.09e-03	-5.45e-04
1	7	-0.10	9.75e-03	-0.05	-5.01e-05	-1.29e-03	5.40e-04
1	8	-2.59e-03	0.10	-0.05	-2.04e-04	-1.23e-03	5.51e-04
1	9	4.60e-03	-0.10	-0.05	2.03e-04	-1.15e-03	-5.56e-04
1	10	-4.93e-03	0.10	-0.05	-2.11e-04	-1.24e-03	-5.06e-04
1	11	6.95e-03	-0.10	-0.05	2.11e-04	-1.15e-03	5.01e-04
1	12	0.05	3.74e-03	-0.05	2.65e-05	-1.14e-03	2.30e-04
1	13	-0.05	-3.51e-03	-0.05	-2.66e-05	-1.24e-03	-2.36e-04
1	14	0.05	-4.40e-03	-0.05	2.41e-05	-1.14e-03	-2.57e-04
1	15	-0.05	4.62e-03	-0.05	-2.42e-05	-1.24e-03	2.51e-04
1	16	-6.74e-04	0.05	-0.05	-9.87e-05	-1.21e-03	2.55e-04
1	17	2.69e-03	-0.05	-0.05	9.86e-05	-1.17e-03	-2.61e-04
1	18	-1.85e-03	0.05	-0.05	-1.02e-04	-1.21e-03	-2.40e-04
1	19	3.87e-03	-0.05	-0.05	1.02e-04	-1.17e-03	2.35e-04
1	20	1.01e-03	1.13e-04	-0.05	0.0	-1.19e-03	-2.63e-06
1	21	1.01e-03	1.13e-04	-0.05	0.0	-1.19e-03	-2.63e-06
1	22	1.01e-03	1.13e-04	-0.05	0.0	-1.19e-03	-2.63e-06
2	1	-3.98e-04	2.57e-04	-0.07	0.0	1.78e-03	3.48e-06
2	2	-8.10e-05	-2.91e-05	-7.33e-03	-1.83e-06	1.68e-05	-1.33e-05
2	3	-2.76e-04	1.68e-04	-0.05	0.0	1.19e-03	0.0
2	4	0.10	-8.39e-03	-0.05	-8.89e-05	1.48e-03	5.07e-04
2	5	-0.10	8.72e-03	-0.05	8.97e-05	8.91e-04	-5.06e-04
2	6	0.10	1.68e-03	-0.05	-8.88e-05	1.47e-03	-5.69e-04
2	7	-0.10	-1.34e-03	-0.05	8.96e-05	9.00e-04	5.71e-04
2	8	-3.88e-03	0.10	-0.05	-1.19e-04	1.27e-03	5.68e-04
2	9	3.32e-03	-0.10	-0.05	1.20e-04	1.10e-03	-5.67e-04
2	10	-6.22e-03	0.10	-0.05	-1.23e-04	1.27e-03	-5.09e-04
2	11	5.67e-03	-0.10	-0.05	1.24e-04	1.10e-03	5.10e-04
2	12	0.05	-3.94e-03	-0.05	-4.30e-05	1.33e-03	2.36e-04
2	13	-0.05	4.27e-03	-0.05	4.38e-05	1.04e-03	-2.35e-04
2	14	0.05	8.94e-04	-0.05	-4.31e-05	1.32e-03	-2.70e-04
2	15	-0.05	-5.58e-04	-0.05	4.39e-05	1.05e-03	2.71e-04
2	16	-1.96e-03	0.05	-0.05	-5.75e-05	1.23e-03	2.67e-04
2	17	1.41e-03	-0.05	-0.05	5.83e-05	1.14e-03	-2.66e-04
2	18	-3.14e-03	0.05	-0.05	-5.95e-05	1.23e-03	-2.38e-04
2	19	2.59e-03	-0.05	-0.05	6.03e-05	1.15e-03	2.40e-04
2	20	-2.76e-04	1.68e-04	-0.05	0.0	1.19e-03	0.0
2	21	-2.76e-04	1.68e-04	-0.05	0.0	1.19e-03	0.0
2	22	-2.76e-04	1.68e-04	-0.05	0.0	1.19e-03	0.0
3	1	-0.03	1.01e-03	-0.02	0.0	1.78e-03	-1.98e-05
3	2	-9.78e-04	-1.82e-05	-6.51e-03	0.0	2.98e-06	-2.32e-05
3	3	-0.02	6.68e-04	-0.02	0.0	1.19e-03	-1.63e-05
3	4	0.09	-0.08	-5.87e-03	-1.22e-05	1.28e-03	4.80e-04
3	5	-0.13	0.08	-0.03	1.31e-05	1.10e-03	-5.12e-04
3	6	0.09	0.08	-6.08e-03	-8.01e-06	1.28e-03	-5.65e-04
3	7	-0.12	-0.08	-0.03	8.97e-06	1.10e-03	5.32e-04
3	8	-0.02	0.14	-0.02	-8.28e-05	1.21e-03	5.41e-04
3	9	-0.01	-0.14	-0.02	8.37e-05	1.17e-03	-5.73e-04
3	10	-0.02	0.13	-0.02	-8.42e-05	1.21e-03	-5.15e-04

3	11	-0.01	-0.13	-0.01	8.52e-05	1.17e-03	4.83e-04
3	12	0.04	-0.03	-0.01	-5.72e-06	1.23e-03	2.16e-04
3	13	-0.07	0.04	-0.02	6.68e-06	1.14e-03	-2.48e-04
3	14	0.03	0.04	-0.01	-3.44e-06	1.23e-03	-2.74e-04
3	15	-0.07	-0.04	-0.02	4.40e-06	1.15e-03	2.42e-04
3	16	-0.02	0.07	-0.02	-4.01e-05	1.20e-03	2.45e-04
3	17	-0.02	-0.07	-0.02	4.11e-05	1.18e-03	-2.77e-04
3	18	-0.02	0.06	-0.02	-4.03e-05	1.20e-03	-2.50e-04
3	19	-0.01	-0.06	-0.02	4.13e-05	1.18e-03	2.18e-04
3	20	-0.02	6.68e-04	-0.02	0.0	1.19e-03	-1.63e-05
3	21	-0.02	6.68e-04	-0.02	0.0	1.19e-03	-1.63e-05
3	22	-0.02	6.68e-04	-0.02	0.0	1.19e-03	-1.63e-05
4	1	-0.03	8.56e-04	-0.01	1.00e-05	-1.80e-03	4.67e-06
4	2	9.49e-06	-9.23e-05	-7.33e-03	6.10e-06	-2.89e-05	5.23e-06
4	3	-0.02	5.58e-04	-9.69e-03	7.50e-06	-1.20e-03	3.81e-06
4	4	0.12	-0.08	9.30e-04	-4.91e-06	-1.09e-03	5.02e-04
4	5	-0.15	0.08	-0.02	1.99e-05	-1.32e-03	-4.94e-04
4	6	0.12	0.08	6.90e-04	-2.15e-06	-1.10e-03	-5.43e-04
4	7	-0.15	-0.08	-0.02	1.72e-05	-1.31e-03	5.50e-04
4	8	-0.02	0.16	-9.36e-03	-7.20e-05	-1.17e-03	5.62e-04
4	9	-0.01	-0.16	-0.01	8.70e-05	-1.24e-03	-5.54e-04
4	10	-0.02	0.15	-9.08e-03	-7.30e-05	-1.17e-03	-4.95e-04
4	11	-8.89e-03	-0.15	-0.01	8.80e-05	-1.24e-03	5.03e-04
4	12	0.05	-0.04	-4.54e-03	1.36e-06	-1.15e-03	2.37e-04
4	13	-0.08	0.04	-0.01	1.36e-05	-1.26e-03	-2.30e-04
4	14	0.05	0.04	-4.65e-03	2.95e-06	-1.15e-03	-2.53e-04
4	15	-0.08	-0.04	-0.01	1.21e-05	-1.26e-03	2.61e-04
4	16	-0.02	0.08	-9.54e-03	-3.12e-05	-1.19e-03	2.66e-04
4	17	-0.01	-0.08	-9.85e-03	4.62e-05	-1.22e-03	-2.58e-04
4	18	-0.02	0.07	-9.39e-03	-3.13e-05	-1.19e-03	-2.30e-04
4	19	-0.01	-0.07	-9.99e-03	4.63e-05	-1.22e-03	2.38e-04
4	20	-0.02	5.58e-04	-9.69e-03	7.50e-06	-1.20e-03	3.81e-06
4	21	-0.02	5.58e-04	-9.69e-03	7.50e-06	-1.20e-03	3.81e-06
4	22	-0.02	5.58e-04	-9.69e-03	7.50e-06	-1.20e-03	3.81e-06
5	1	-4.01e-04	2.47e-04	0.04	0.0	-1.76e-03	-6.83e-06
5	2	-7.05e-05	-3.19e-05	-7.72e-03	0.0	1.06e-05	0.0
5	3	-2.77e-04	1.61e-04	0.02	0.0	-1.17e-03	-4.58e-06
5	4	0.14	-0.01	0.02	-4.92e-06	-1.11e-03	4.91e-04
5	5	-0.14	0.01	0.02	5.59e-06	-1.23e-03	-5.01e-04
5	6	0.14	1.27e-03	0.02	-3.01e-06	-1.11e-03	-5.47e-04
5	7	-0.14	-9.45e-04	0.02	3.68e-06	-1.23e-03	5.38e-04
5	8	-5.01e-03	0.14	0.02	-6.88e-05	-1.18e-03	5.51e-04
5	9	4.46e-03	-0.14	0.02	6.95e-05	-1.16e-03	-5.60e-04
5	10	-8.55e-03	0.14	0.02	-7.06e-05	-1.18e-03	-5.00e-04
5	11	8.00e-03	-0.14	0.02	7.13e-05	-1.16e-03	4.91e-04
5	12	0.07	-5.08e-03	0.02	-2.26e-06	-1.14e-03	2.28e-04
5	13	-0.07	5.41e-03	0.02	2.92e-06	-1.20e-03	-2.37e-04
5	14	0.07	6.91e-04	0.02	-1.30e-06	-1.14e-03	-2.59e-04
5	15	-0.07	-3.70e-04	0.02	1.97e-06	-1.20e-03	2.50e-04
5	16	-2.50e-03	0.07	0.02	-3.32e-05	-1.17e-03	2.56e-04
5	17	1.95e-03	-0.07	0.02	3.39e-05	-1.16e-03	-2.65e-04
5	18	-4.27e-03	0.07	0.02	-3.40e-05	-1.18e-03	-2.37e-04
5	19	3.71e-03	-0.07	0.02	3.46e-05	-1.16e-03	2.28e-04
5	20	-2.77e-04	1.61e-04	0.02	0.0	-1.17e-03	-4.58e-06
5	21	-2.77e-04	1.61e-04	0.02	0.0	-1.17e-03	-4.58e-06
5	22	-2.77e-04	1.61e-04	0.02	0.0	-1.17e-03	-4.58e-06
6	1	1.49e-03	1.66e-04	0.04	0.0	1.76e-03	-3.33e-06
6	2	-8.09e-05	-2.03e-05	-7.72e-03	0.0	-1.01e-05	0.0
6	3	9.81e-04	1.08e-04	0.02	0.0	1.17e-03	-2.13e-06
6	4	0.14	9.54e-03	0.02	-4.75e-06	1.24e-03	4.92e-04
6	5	-0.14	-9.32e-03	0.02	4.96e-06	1.10e-03	-4.96e-04
6	6	0.14	-0.01	0.02	-1.92e-06	1.24e-03	-5.44e-04
6	7	-0.14	0.01	0.02	2.13e-06	1.10e-03	5.40e-04
6	8	-3.75e-03	0.14	0.02	-6.40e-05	1.17e-03	5.52e-04
6	9	5.71e-03	-0.14	0.02	6.42e-05	1.17e-03	-5.56e-04
6	10	-7.29e-03	0.14	0.02	-6.62e-05	1.18e-03	-4.96e-04
6	11	9.25e-03	-0.14	0.02	6.64e-05	1.17e-03	4.92e-04
6	12	0.07	4.59e-03	0.02	-2.28e-06	1.20e-03	2.30e-04
6	13	-0.07	-4.37e-03	0.02	2.49e-06	1.14e-03	-2.34e-04
6	14	0.07	-4.98e-03	0.02	0.0	1.20e-03	-2.57e-04
6	15	-0.07	5.19e-03	0.02	1.09e-06	1.14e-03	2.52e-04
6	16	-1.24e-03	0.07	0.02	-3.10e-05	1.17e-03	2.58e-04
6	17	3.20e-03	-0.07	0.02	3.12e-05	1.17e-03	-2.62e-04
6	18	-3.01e-03	0.07	0.02	-3.19e-05	1.17e-03	-2.34e-04
6	19	4.97e-03	-0.07	0.02	3.21e-05	1.17e-03	2.29e-04
6	20	9.81e-04	1.08e-04	0.02	0.0	1.17e-03	-2.13e-06
6	21	9.81e-04	1.08e-04	0.02	0.0	1.17e-03	-2.13e-06

6	22	9.81e-04	1.08e-04	0.02	0.0	1.17e-03	-2.13e-06
7	1	7.45e-03	7.50e-04	-0.03	2.74e-06	4.16e-04	-3.05e-06
7	2	-1.60e-04	-9.80e-05	-7.24e-03	1.18e-06	5.07e-06	0.0
7	3	4.95e-03	4.87e-04	-0.02	1.98e-06	2.78e-04	-1.95e-06
7	4	0.15	-0.07	-0.01	6.52e-06	3.20e-04	5.00e-04
7	5	-0.14	0.07	-0.03	-2.56e-06	2.36e-04	-5.04e-04
7	6	0.14	0.07	-0.01	7.41e-06	3.20e-04	-5.51e-04
7	7	-0.13	-0.07	-0.03	-3.44e-06	2.35e-04	5.47e-04
7	8	2.68e-04	0.16	-0.02	-6.17e-05	2.55e-04	5.60e-04
7	9	9.63e-03	-0.16	-0.02	6.57e-05	3.00e-04	-5.64e-04
7	10	-3.18e-03	0.15	-0.02	-6.41e-05	2.55e-04	-5.03e-04
7	11	0.01	-0.15	-0.02	6.81e-05	3.01e-04	4.99e-04
7	12	0.07	-0.03	-0.01	4.13e-06	2.98e-04	2.34e-04
7	13	-0.06	0.03	-0.02	0.0	2.58e-04	-2.38e-04
7	14	0.07	0.03	-0.01	4.52e-06	2.98e-04	-2.60e-04
7	15	-0.06	-0.03	-0.02	0.0	2.57e-04	2.56e-04
7	16	2.75e-03	0.08	-0.02	-2.88e-05	2.67e-04	2.62e-04
7	17	7.15e-03	-0.08	-0.02	3.28e-05	2.89e-04	-2.66e-04
7	18	1.03e-03	0.07	-0.02	-3.01e-05	2.67e-04	-2.37e-04
7	19	8.87e-03	-0.07	-0.02	3.40e-05	2.89e-04	2.33e-04
7	20	4.95e-03	4.87e-04	-0.02	1.98e-06	2.78e-04	-1.95e-06
7	21	4.95e-03	4.87e-04	-0.02	1.98e-06	2.78e-04	-1.95e-06
7	22	4.95e-03	4.87e-04	-0.02	1.98e-06	2.78e-04	-1.95e-06
8	1	-3.18e-03	5.33e-04	2.65e-03	1.64e-06	-1.28e-04	-5.07e-06
8	2	-5.70e-05	-7.23e-05	-7.51e-03	0.0	1.02e-06	0.0
8	3	-2.13e-03	3.46e-04	7.63e-04	1.17e-06	-8.49e-05	-3.33e-06
8	4	0.14	-0.04	6.51e-03	6.85e-06	7.82e-06	4.93e-04
8	5	-0.14	0.04	-4.99e-03	-4.51e-06	-1.78e-04	-5.00e-04
8	6	0.14	0.04	6.38e-03	3.65e-06	4.74e-06	-5.49e-04
8	7	-0.14	-0.04	-4.85e-03	-1.31e-06	-1.75e-04	5.42e-04
8	8	-6.83e-03	0.15	9.97e-04	-6.74e-05	-6.56e-05	5.53e-04
8	9	2.57e-03	-0.15	5.30e-04	6.98e-05	-1.04e-04	-5.60e-04
8	10	-0.01	0.15	1.09e-03	-6.93e-05	-6.83e-05	-5.01e-04
8	11	6.11e-03	-0.14	4.32e-04	7.17e-05	-1.02e-04	4.94e-04
8	12	0.07	-0.02	3.55e-03	3.87e-06	-3.98e-05	2.30e-04
8	13	-0.07	0.02	-2.03e-03	-1.52e-06	-1.30e-04	-2.36e-04
8	14	0.07	0.02	3.49e-03	2.34e-06	-4.15e-05	-2.59e-04
8	15	-0.07	-0.02	-1.97e-03	0.0	-1.28e-04	2.53e-04
8	16	-4.34e-03	0.07	8.76e-04	-3.21e-05	-7.54e-05	2.58e-04
8	17	7.75e-05	-0.07	6.50e-04	3.45e-05	-9.44e-05	-2.64e-04
8	18	-6.10e-03	0.07	9.25e-04	-3.29e-05	-7.70e-05	-2.37e-04
8	19	1.84e-03	-0.07	6.01e-04	3.53e-05	-9.29e-05	2.30e-04
8	20	-2.13e-03	3.46e-04	7.63e-04	1.17e-06	-8.49e-05	-3.33e-06
8	21	-2.13e-03	3.46e-04	7.63e-04	1.17e-06	-8.49e-05	-3.33e-06
8	22	-2.13e-03	3.46e-04	7.63e-04	1.17e-06	-8.49e-05	-3.33e-06
9	1	-0.05	1.30e-03	-0.02	1.50e-05	-2.67e-05	2.79e-05
9	2	7.38e-04	1.89e-04	-7.10e-03	7.79e-06	-2.82e-05	1.92e-05
9	3	-0.03	8.95e-04	-0.01	1.10e-05	-2.16e-05	2.11e-05
9	4	0.09	-0.08	-2.42e-03	2.06e-05	1.62e-05	5.19e-04
9	5	-0.16	0.08	-0.02	1.42e-06	-5.93e-05	-4.77e-04
9	6	0.08	0.08	-2.65e-03	2.11e-05	1.68e-05	-5.21e-04
9	7	-0.15	-0.08	-0.02	0.0	-5.99e-05	5.63e-04
9	8	-0.04	0.15	-0.01	-4.72e-05	-5.00e-05	5.78e-04
9	9	-0.03	-0.15	-0.01	6.92e-05	6.88e-06	-5.35e-04
9	10	-0.04	0.14	-0.01	-5.01e-05	-4.99e-05	-4.73e-04
9	11	-0.03	-0.14	-0.01	7.22e-05	6.82e-06	5.16e-04
9	12	0.02	-0.03	-7.80e-03	1.57e-05	-3.57e-06	2.55e-04
9	13	-0.09	0.04	-0.02	6.39e-06	-3.95e-05	-2.13e-04
9	14	0.02	0.04	-7.91e-03	1.57e-05	-2.74e-06	-2.33e-04
9	15	-0.09	-0.04	-0.02	6.39e-06	-4.04e-05	2.75e-04
9	16	-0.04	0.07	-0.01	-1.70e-05	-3.55e-05	2.82e-04
9	17	-0.03	-0.07	-0.01	3.91e-05	-7.59e-06	-2.40e-04
9	18	-0.04	0.07	-0.01	-1.87e-05	-3.50e-05	-2.11e-04
9	19	-0.03	-0.06	-0.01	4.08e-05	-8.15e-06	2.53e-04
9	20	-0.03	8.95e-04	-0.01	1.10e-05	-2.16e-05	2.11e-05
9	21	-0.03	8.95e-04	-0.01	1.10e-05	-2.16e-05	2.11e-05
9	22	-0.03	8.95e-04	-0.01	1.10e-05	-2.16e-05	2.11e-05
10	1	-6.51e-03	-3.43e-04	-7.94e-03	-7.13e-06	4.07e-04	-5.83e-06
10	2	-2.44e-04	1.55e-05	-6.71e-03	-2.86e-06	-3.10e-06	-3.18e-06
10	3	-4.37e-03	-2.27e-04	-6.19e-03	-5.14e-06	2.71e-04	-4.31e-06
10	4	0.10	0.06	-0.02	-2.87e-05	3.59e-04	5.04e-04
10	5	-0.11	-0.07	2.66e-03	1.84e-05	1.83e-04	-5.13e-04
10	6	0.10	-0.08	-0.01	-2.68e-05	3.56e-04	-5.61e-04
10	7	-0.11	0.08	2.48e-03	1.65e-05	1.86e-04	5.52e-04
10	8	-8.01e-03	0.12	-6.72e-03	-2.95e-05	2.56e-04	5.63e-04
10	9	-7.34e-04	-0.12	-5.66e-03	1.92e-05	2.87e-04	-5.72e-04
10	10	-0.01	0.13	-6.86e-03	-2.72e-05	2.54e-04	-5.18e-04

10	11	1.66e-03	-0.13	-5.52e-03	1.69e-05	2.88e-04	5.09e-04
10	12	0.05	0.03	-0.01	-1.67e-05	3.14e-04	2.35e-04
10	13	-0.06	-0.03	-1.90e-03	6.44e-06	2.28e-04	-2.43e-04
10	14	0.05	-0.04	-0.01	-1.53e-05	3.12e-04	-2.65e-04
10	15	-0.05	0.04	-1.98e-03	5.06e-06	2.30e-04	2.57e-04
10	16	-6.09e-03	0.06	-6.45e-03	-1.71e-05	2.64e-04	2.61e-04
10	17	-2.66e-03	-0.06	-5.93e-03	6.84e-06	2.78e-04	-2.70e-04
10	18	-7.28e-03	0.06	-6.52e-03	-1.55e-05	2.63e-04	-2.46e-04
10	19	-1.46e-03	-0.06	-5.86e-03	5.26e-06	2.79e-04	2.38e-04
10	20	-4.37e-03	-2.27e-04	-6.19e-03	-5.14e-06	2.71e-04	-4.31e-06
10	21	-4.37e-03	-2.27e-04	-6.19e-03	-5.14e-06	2.71e-04	-4.31e-06
10	22	-4.37e-03	-2.27e-04	-6.19e-03	-5.14e-06	2.71e-04	-4.31e-06
11	1	0.03	-3.06e-04	-0.02	-1.38e-06	-1.76e-03	0.0
11	2	2.40e-04	1.10e-04	-6.98e-03	0.0	1.14e-05	6.39e-06
11	3	0.02	-1.89e-04	-0.02	-1.01e-06	-1.17e-03	1.32e-06
11	4	0.13	0.07	-0.03	-6.50e-06	-1.09e-03	4.98e-04
11	5	-0.09	-0.07	-5.74e-03	4.47e-06	-1.25e-03	-4.95e-04
11	6	0.12	-0.09	-0.03	6.12e-06	-1.09e-03	-5.43e-04
11	7	-0.09	0.09	-5.96e-03	-8.15e-06	-1.25e-03	5.46e-04
11	8	0.01	0.13	-0.02	-7.78e-05	-1.18e-03	5.58e-04
11	9	0.02	-0.13	-0.02	7.57e-05	-1.16e-03	-5.55e-04
11	10	0.01	0.14	-0.02	-8.05e-05	-1.18e-03	-4.95e-04
11	11	0.02	-0.14	-0.02	7.85e-05	-1.16e-03	4.98e-04
11	12	0.07	0.03	-0.02	-3.60e-06	-1.13e-03	2.34e-04
11	13	-0.03	-0.03	-0.01	1.58e-06	-1.21e-03	-2.32e-04
11	14	0.07	-0.04	-0.02	2.36e-06	-1.13e-03	-2.54e-04
11	15	-0.03	0.04	-0.01	-4.39e-06	-1.21e-03	2.57e-04
11	16	0.02	0.06	-0.02	-3.81e-05	-1.17e-03	2.63e-04
11	17	0.02	-0.06	-0.02	3.61e-05	-1.17e-03	-2.60e-04
11	18	0.02	0.07	-0.02	-3.96e-05	-1.17e-03	-2.31e-04
11	19	0.02	-0.07	-0.02	3.76e-05	-1.17e-03	2.34e-04
11	20	0.02	-1.89e-04	-0.02	-1.01e-06	-1.17e-03	1.32e-06
11	21	0.02	-1.89e-04	-0.02	-1.01e-06	-1.17e-03	1.32e-06
11	22	0.02	-1.89e-04	-0.02	-1.01e-06	-1.17e-03	1.32e-06
12	1	8.25e-03	7.30e-04	-6.75e-03	-8.37e-06	-3.95e-04	-2.11e-05
12	2	7.70e-04	-1.69e-04	-5.54e-03	1.15e-05	-7.35e-06	-3.34e-06
12	3	5.60e-03	4.64e-04	-5.24e-03	-4.04e-06	-2.64e-04	-1.45e-05
12	4	0.11	-0.07	1.72e-03	1.07e-04	-6.77e-05	5.18e-04
12	5	-0.10	0.07	-0.01	-1.15e-04	-4.61e-04	-5.47e-04
12	6	0.11	0.07	1.60e-03	1.01e-04	-7.31e-05	-5.79e-04
12	7	-0.10	-0.07	-0.01	-1.09e-04	-4.56e-04	5.49e-04
12	8	2.09e-03	0.13	-6.19e-03	-3.00e-05	-2.17e-04	5.73e-04
12	9	9.11e-03	-0.13	-4.29e-03	2.19e-05	-3.11e-04	-6.02e-04
12	10	-5.88e-04	0.12	-6.40e-03	1.71e-05	-2.20e-04	-5.28e-04
12	11	0.01	-0.12	-4.08e-03	-2.52e-05	-3.09e-04	4.99e-04
12	12	0.06	-0.03	-1.87e-03	5.02e-05	-1.69e-04	2.38e-04
12	13	-0.04	0.03	-8.61e-03	-5.83e-05	-3.60e-04	-2.67e-04
12	14	0.05	0.03	-1.91e-03	4.64e-05	-1.72e-04	-2.77e-04
12	15	-0.04	-0.03	-8.57e-03	-5.45e-05	-3.57e-04	2.48e-04
12	16	3.97e-03	0.06	-5.70e-03	-1.61e-05	-2.41e-04	2.63e-04
12	17	7.23e-03	-0.06	-4.78e-03	8.04e-06	-2.87e-04	-2.92e-04
12	18	2.63e-03	0.06	-5.79e-03	5.95e-06	-2.43e-04	-2.54e-04
12	19	8.58e-03	-0.06	-4.69e-03	-1.40e-05	-2.86e-04	2.25e-04
12	20	5.60e-03	4.64e-04	-5.24e-03	-4.04e-06	-2.64e-04	-1.45e-05
12	21	5.60e-03	4.64e-04	-5.24e-03	-4.04e-06	-2.64e-04	-1.45e-05
12	22	5.60e-03	4.64e-04	-5.24e-03	-4.04e-06	-2.64e-04	-1.45e-05
13	1	-3.29e-03	6.20e-04	-0.04	1.14e-05	1.05e-04	3.20e-06
13	2	-1.46e-04	-2.24e-05	-7.65e-03	6.85e-06	-1.51e-05	-7.75e-06
13	3	-2.21e-03	4.10e-04	-0.03	8.49e-06	6.78e-05	1.10e-06
13	4	0.10	-0.04	-0.02	3.60e-05	-9.78e-05	4.86e-04
13	5	-0.11	0.04	-0.03	-1.90e-05	2.33e-04	-4.83e-04
13	6	0.10	0.04	-0.02	3.46e-05	-9.17e-05	-5.27e-04
13	7	-0.10	-0.04	-0.03	-1.76e-05	2.27e-04	5.29e-04
13	8	-5.80e-03	0.11	-0.03	-5.15e-05	-2.23e-05	5.41e-04
13	9	1.38e-03	-0.11	-0.03	6.85e-05	1.58e-04	-5.39e-04
13	10	-8.21e-03	0.11	-0.03	-5.42e-05	-1.93e-05	-4.84e-04
13	11	3.78e-03	-0.11	-0.03	7.12e-05	1.55e-04	4.86e-04
13	12	0.05	-0.02	-0.02	2.18e-05	-1.29e-05	2.29e-04
13	13	-0.05	0.02	-0.03	-4.79e-06	1.49e-04	-2.27e-04
13	14	0.05	0.02	-0.02	2.11e-05	-9.27e-06	-2.46e-04
13	15	-0.05	-0.02	-0.03	-4.13e-06	1.45e-04	2.49e-04
13	16	-3.89e-03	0.06	-0.03	-2.06e-05	2.37e-05	2.54e-04
13	17	-5.33e-04	-0.06	-0.03	3.76e-05	1.12e-04	-2.52e-04
13	18	-5.10e-03	0.05	-0.03	-2.18e-05	2.59e-05	-2.27e-04
13	19	6.74e-04	-0.05	-0.03	3.88e-05	1.10e-04	2.29e-04
13	20	-2.21e-03	4.10e-04	-0.03	8.49e-06	6.78e-05	1.10e-06
13	21	-2.21e-03	4.10e-04	-0.03	8.49e-06	6.78e-05	1.10e-06

13	22	-2.21e-03	4.10e-04	-0.03	8.49e-06	6.78e-05	1.10e-06
14	1	5.66e-04	2.11e-04	-0.08	0.0	0.0	0.0
14	2	-7.91e-05	-2.68e-05	-7.40e-03	0.0	0.0	0.0
14	3	3.67e-04	1.37e-04	-0.05	0.0	0.0	0.0
14	4	0.10	-6.30e-03	-0.05	-9.33e-06	1.38e-04	0.0
14	5	-0.10	6.57e-03	-0.05	9.33e-06	-1.38e-04	0.0
14	6	0.10	-4.08e-03	-0.05	-4.15e-06	1.35e-04	0.0
14	7	-0.10	4.36e-03	-0.05	4.15e-06	-1.35e-04	0.0
14	8	-3.23e-03	0.10	-0.05	-1.32e-04	-3.65e-06	0.0
14	9	3.96e-03	-0.10	-0.05	1.32e-04	3.59e-06	0.0
14	10	-5.58e-03	0.10	-0.05	-1.36e-04	-8.31e-06	0.0
14	11	6.31e-03	-0.10	-0.05	1.36e-04	8.26e-06	0.0
14	12	0.05	-2.95e-03	-0.05	-4.56e-06	6.69e-05	0.0
14	13	-0.05	3.23e-03	-0.05	4.57e-06	-6.70e-05	0.0
14	14	0.05	-1.83e-03	-0.05	-2.02e-06	6.55e-05	0.0
14	15	-0.05	2.11e-03	-0.05	2.03e-06	-6.56e-05	0.0
14	16	-1.32e-03	0.05	-0.05	-6.40e-05	-1.72e-06	0.0
14	17	2.05e-03	-0.05	-0.05	6.40e-05	1.67e-06	0.0
14	18	-2.50e-03	0.05	-0.05	-6.57e-05	-4.02e-06	0.0
14	19	3.23e-03	-0.05	-0.05	6.57e-05	3.96e-06	0.0
14	20	3.67e-04	1.37e-04	-0.05	0.0	0.0	0.0
14	21	3.67e-04	1.37e-04	-0.05	0.0	0.0	0.0
14	22	3.67e-04	1.37e-04	-0.05	0.0	0.0	0.0
15	1	5.44e-04	2.07e-04	0.04	0.0	0.0	0.0
15	2	-7.56e-05	-2.61e-05	-7.77e-03	0.0	0.0	0.0
15	3	3.52e-04	1.34e-04	0.03	0.0	0.0	0.0
15	4	0.14	-8.75e-03	0.03	-4.46e-06	6.97e-05	0.0
15	5	-0.14	9.01e-03	0.03	4.47e-06	-6.98e-05	0.0
15	6	0.14	-5.29e-03	0.03	-2.08e-06	6.82e-05	0.0
15	7	-0.14	5.56e-03	0.03	2.10e-06	-6.82e-05	0.0
15	8	-4.38e-03	0.14	0.03	-6.72e-05	-1.95e-06	0.0
15	9	5.08e-03	-0.14	0.03	6.72e-05	1.90e-06	0.0
15	10	-7.92e-03	0.14	0.03	-6.93e-05	-4.14e-06	0.0
15	11	8.63e-03	-0.14	0.03	6.93e-05	4.09e-06	0.0
15	12	0.07	-4.14e-03	0.03	-2.17e-06	3.38e-05	0.0
15	13	-0.07	4.41e-03	0.03	2.18e-06	-3.39e-05	0.0
15	14	0.07	-2.41e-03	0.03	-1.00e-06	3.31e-05	0.0
15	15	-0.07	2.68e-03	0.03	1.01e-06	-3.32e-05	0.0
15	16	-1.87e-03	0.07	0.03	-3.26e-05	0.0	0.0
15	17	2.58e-03	-0.07	0.03	3.26e-05	0.0	0.0
15	18	-3.64e-03	0.07	0.03	-3.35e-05	-2.02e-06	0.0
15	19	4.34e-03	-0.07	0.03	3.35e-05	1.96e-06	0.0
15	20	3.52e-04	1.34e-04	0.03	0.0	0.0	0.0
15	21	3.52e-04	1.34e-04	0.03	0.0	0.0	0.0
15	22	3.52e-04	1.34e-04	0.03	0.0	0.0	0.0
16	1	0.03	-3.59e-04	-0.01	5.35e-06	1.77e-03	-7.35e-06
16	2	6.21e-05	8.64e-05	-7.18e-03	3.66e-06	2.89e-06	-1.65e-06
16	3	0.02	-2.28e-04	-9.51e-03	4.05e-06	1.18e-03	-5.12e-06
16	4	0.16	0.07	-0.02	1.09e-05	1.25e-03	4.94e-04
16	5	-0.12	-0.07	1.04e-03	-2.77e-06	1.11e-03	-5.04e-04
16	6	0.15	-0.09	-0.02	1.22e-05	1.25e-03	-5.52e-04
16	7	-0.12	0.09	7.96e-04	-4.12e-06	1.11e-03	5.42e-04
16	8	0.01	0.15	-9.19e-03	-7.67e-05	1.17e-03	5.54e-04
16	9	0.02	-0.15	-9.83e-03	8.48e-05	1.19e-03	-5.64e-04
16	10	9.89e-03	0.16	-8.89e-03	-8.06e-05	1.17e-03	-5.04e-04
16	11	0.03	-0.16	-0.01	8.87e-05	1.19e-03	4.94e-04
16	12	0.08	0.03	-0.01	7.29e-06	1.22e-03	2.29e-04
16	13	-0.05	-0.03	-4.39e-03	0.0	1.15e-03	-2.39e-04
16	14	0.08	-0.04	-0.01	7.83e-06	1.22e-03	-2.62e-04
16	15	-0.05	0.04	-4.50e-03	0.0	1.15e-03	2.52e-04
16	16	0.02	0.07	-9.35e-03	-3.50e-05	1.18e-03	2.57e-04
16	17	0.02	-0.07	-9.66e-03	4.31e-05	1.19e-03	-2.68e-04
16	18	0.01	0.08	-9.21e-03	-3.70e-05	1.18e-03	-2.39e-04
16	19	0.02	-0.08	-9.80e-03	4.51e-05	1.19e-03	2.29e-04
16	20	0.02	-2.28e-04	-9.51e-03	4.05e-06	1.18e-03	-5.12e-06
16	21	0.02	-2.28e-04	-9.51e-03	4.05e-06	1.18e-03	-5.12e-06
16	22	0.02	-2.28e-04	-9.51e-03	4.05e-06	1.18e-03	-5.12e-06
17	1	4.38e-03	-8.39e-05	-0.04	4.08e-06	-1.28e-04	-5.95e-06
17	2	-1.96e-05	5.40e-05	-7.31e-03	7.12e-06	4.03e-06	2.98e-06
17	3	2.92e-03	-4.87e-05	-0.03	3.67e-06	-8.51e-05	-3.57e-06
17	4	0.11	0.04	-0.03	1.75e-05	-5.70e-05	4.85e-04
17	5	-0.10	-0.04	-0.02	-1.01e-05	-1.13e-04	-4.92e-04
17	6	0.10	-0.05	-0.03	1.55e-05	-5.54e-05	-5.39e-04
17	7	-0.10	0.05	-0.02	-8.18e-06	-1.15e-04	5.32e-04
17	8	-6.99e-04	0.11	-0.03	-8.70e-05	-4.46e-05	5.46e-04
17	9	6.54e-03	-0.11	-0.03	9.44e-05	-1.26e-04	-5.53e-04
17	10	-3.07e-03	0.12	-0.03	-9.03e-05	-4.26e-05	-4.91e-04

17	11	8.91e-03	-0.12	-0.03	9.77e-05	-1.28e-04	4.84e-04
17	12	0.05	0.02	-0.03	1.03e-05	-7.16e-05	2.25e-04
17	13	-0.05	-0.02	-0.02	-2.96e-06	-9.86e-05	-2.33e-04
17	14	0.05	-0.02	-0.03	9.26e-06	-7.05e-05	-2.55e-04
17	15	-0.05	0.02	-0.02	-1.91e-06	-9.97e-05	2.48e-04
17	16	1.22e-03	0.05	-0.03	-4.02e-05	-6.56e-05	2.55e-04
17	17	4.61e-03	-0.05	-0.03	4.76e-05	-1.05e-04	-2.62e-04
17	18	3.24e-05	0.06	-0.03	-4.18e-05	-6.44e-05	-2.31e-04
17	19	5.80e-03	-0.06	-0.03	4.92e-05	-1.06e-04	2.24e-04
17	20	2.92e-03	-4.87e-05	-0.03	3.67e-06	-8.51e-05	-3.57e-06
17	21	2.92e-03	-4.87e-05	-0.03	3.67e-06	-8.51e-05	-3.57e-06
17	22	2.92e-03	-4.87e-05	-0.03	3.67e-06	-8.51e-05	-3.57e-06
18	1	-6.34e-03	-3.18e-04	-0.03	1.73e-06	-4.09e-04	-4.34e-06
18	2	1.79e-05	5.50e-05	-7.22e-03	0.0	-1.77e-06	0.0
18	3	-4.23e-03	-2.05e-04	-0.02	1.28e-06	-2.73e-04	-2.82e-06
18	4	0.14	0.06	-0.03	-4.32e-06	-2.07e-04	4.99e-04
18	5	-0.14	-0.06	-0.01	6.88e-06	-3.38e-04	-5.04e-04
18	6	0.13	-0.08	-0.03	0.0	-2.08e-04	-5.53e-04
18	7	-0.14	0.08	-0.01	2.75e-06	-3.37e-04	5.47e-04
18	8	-8.89e-03	0.15	-0.02	-6.18e-05	-2.66e-04	5.59e-04
18	9	4.37e-04	-0.15	-0.02	6.43e-05	-2.79e-04	-5.64e-04
18	10	-0.01	0.16	-0.02	-6.35e-05	-2.65e-04	-5.05e-04
18	11	3.90e-03	-0.16	-0.02	6.61e-05	-2.80e-04	4.99e-04
18	12	0.06	0.03	-0.02	-1.43e-06	-2.41e-04	2.32e-04
18	13	-0.07	-0.03	-0.01	3.99e-06	-3.04e-04	-2.38e-04
18	14	0.06	-0.04	-0.02	0.0	-2.41e-04	-2.61e-04
18	15	-0.07	0.04	-0.01	1.96e-06	-3.04e-04	2.55e-04
18	16	-6.42e-03	0.07	-0.02	-2.94e-05	-2.70e-04	2.60e-04
18	17	-2.03e-03	-0.07	-0.02	3.19e-05	-2.76e-04	-2.66e-04
18	18	-8.15e-03	0.08	-0.02	-3.00e-05	-2.69e-04	-2.38e-04
18	19	-3.04e-04	-0.08	-0.02	3.26e-05	-2.76e-04	2.33e-04
18	20	-4.23e-03	-2.05e-04	-0.02	1.28e-06	-2.73e-04	-2.82e-06
18	21	-4.23e-03	-2.05e-04	-0.02	1.28e-06	-2.73e-04	-2.82e-06
18	22	-4.23e-03	-2.05e-04	-0.02	1.28e-06	-2.73e-04	-2.82e-06
19	1	4.28e-03	-1.18e-04	2.67e-03	0.0	1.31e-04	-3.84e-06
19	2	-9.31e-05	2.06e-05	-7.50e-03	0.0	0.0	0.0
19	3	2.84e-03	-7.59e-05	7.80e-04	0.0	8.71e-05	-2.48e-06
19	4	0.14	0.04	-4.90e-03	4.98e-06	1.61e-04	4.95e-04
19	5	-0.14	-0.04	6.46e-03	-4.22e-06	1.37e-05	-5.00e-04
19	6	0.14	-0.05	-4.77e-03	3.86e-06	1.59e-04	-5.47e-04
19	7	-0.14	0.05	6.33e-03	-3.10e-06	1.57e-05	5.43e-04
19	8	-1.87e-03	0.14	9.53e-04	-7.11e-05	8.19e-05	5.55e-04
19	9	7.55e-03	-0.14	6.07e-04	7.19e-05	9.24e-05	-5.60e-04
19	10	-5.39e-03	0.15	1.12e-03	-7.39e-05	8.06e-05	-5.00e-04
19	11	0.01	-0.15	4.45e-04	7.47e-05	9.37e-05	4.95e-04
19	12	0.07	0.02	-1.97e-03	2.59e-06	1.23e-04	2.31e-04
19	13	-0.07	-0.02	3.54e-03	-1.82e-06	5.15e-05	-2.36e-04
19	14	0.07	-0.02	-1.91e-03	1.99e-06	1.22e-04	-2.58e-04
19	15	-0.06	0.02	3.48e-03	-1.23e-06	5.25e-05	2.53e-04
19	16	6.23e-04	0.07	8.61e-04	-3.43e-05	8.47e-05	2.59e-04
19	17	5.05e-03	-0.07	6.99e-04	3.50e-05	8.95e-05	-2.64e-04
19	18	-1.13e-03	0.07	9.42e-04	-3.56e-05	8.40e-05	-2.35e-04
19	19	6.81e-03	-0.07	6.19e-04	3.64e-05	9.03e-05	2.31e-04
19	20	2.84e-03	-7.59e-05	7.80e-04	0.0	8.71e-05	-2.48e-06
19	21	2.84e-03	-7.59e-05	7.80e-04	0.0	8.71e-05	-2.48e-06
19	22	2.84e-03	-7.59e-05	7.80e-04	0.0	8.71e-05	-2.48e-06
20	1	0.06	7.12e-05	-0.02	3.30e-06	1.46e-06	-2.65e-05
20	2	8.84e-04	3.52e-04	-7.09e-03	2.63e-06	3.56e-06	-1.34e-05
20	3	0.04	9.44e-05	-0.01	2.55e-06	1.45e-06	-1.95e-05
20	4	0.16	0.07	-0.02	-4.16e-06	6.76e-05	4.82e-04
20	5	-0.09	-0.07	-2.30e-03	9.25e-06	-6.47e-05	-5.21e-04
20	6	0.16	-0.09	-0.02	0.0	6.66e-05	-5.70e-04
20	7	-0.08	0.09	-2.54e-03	6.03e-06	-6.37e-05	5.31e-04
20	8	0.03	0.14	-0.01	-5.67e-05	1.04e-05	5.42e-04
20	9	0.04	-0.14	-0.01	6.18e-05	-7.49e-06	-5.81e-04
20	10	0.03	0.15	-0.01	-5.78e-05	1.13e-05	-5.23e-04
20	11	0.04	-0.15	-0.01	6.29e-05	-8.39e-06	4.84e-04
20	12	0.10	0.03	-0.02	0.0	3.35e-05	2.16e-04
20	13	-0.02	-0.03	-7.73e-03	5.82e-06	-3.06e-05	-2.55e-04
20	14	0.10	-0.04	-0.02	0.0	3.32e-05	-2.78e-04
20	15	-0.02	0.04	-7.83e-03	4.16e-06	-3.03e-05	2.39e-04
20	16	0.04	0.07	-0.01	-2.63e-05	5.78e-06	2.44e-04
20	17	0.04	-0.07	-0.01	3.14e-05	-2.89e-06	-2.83e-04
20	18	0.03	0.07	-0.01	-2.65e-05	6.31e-06	-2.56e-04
20	19	0.04	-0.07	-0.01	3.16e-05	-3.42e-06	2.17e-04
20	20	0.04	9.44e-05	-0.01	2.55e-06	1.45e-06	-1.95e-05
20	21	0.04	9.44e-05	-0.01	2.55e-06	1.45e-06	-1.95e-05

20	22	0.04	9.44e-05	-0.01	2.55e-06	1.45e-06	-1.95e-05
21	1	1.49e-03	-7.34e-05	-0.07	-4.62e-04	-1.73e-03	-5.33e-06
21	2	-6.83e-05	-1.92e-05	-7.33e-03	-4.89e-06	-1.42e-05	8.79e-06
21	3	9.81e-04	-5.15e-05	-0.05	-3.09e-04	-1.15e-03	-2.38e-06
21	4	0.10	7.54e-03	-0.05	-2.35e-04	-1.03e-03	4.82e-04
21	5	-0.10	-7.64e-03	-0.05	-3.83e-04	-1.27e-03	-4.87e-04
21	6	0.10	-9.50e-03	-0.05	-2.40e-04	-1.04e-03	-5.37e-04
21	7	-0.10	9.40e-03	-0.05	-3.77e-04	-1.27e-03	5.33e-04
21	8	-1.17e-03	0.10	-0.05	-5.11e-04	-1.21e-03	5.44e-04
21	9	3.14e-03	-0.10	-0.05	-1.06e-04	-1.10e-03	-5.48e-04
21	10	-5.31e-03	0.10	-0.05	-5.19e-04	-1.21e-03	-4.88e-04
21	11	7.27e-03	-0.10	-0.05	-9.87e-05	-1.10e-03	4.83e-04
21	12	0.05	3.53e-03	-0.05	-2.73e-04	-1.10e-03	2.24e-04
21	13	-0.05	-3.64e-03	-0.05	-3.44e-04	-1.21e-03	-2.29e-04
21	14	0.05	-4.47e-03	-0.05	-2.76e-04	-1.10e-03	-2.54e-04
21	15	-0.05	4.37e-03	-0.05	-3.42e-04	-1.21e-03	2.50e-04
21	16	-2.72e-05	0.05	-0.05	-4.07e-04	-1.18e-03	2.55e-04
21	17	1.99e-03	-0.05	-0.05	-2.10e-04	-1.13e-03	-2.59e-04
21	18	-2.05e-03	0.05	-0.05	-4.10e-04	-1.18e-03	-2.29e-04
21	19	4.01e-03	-0.05	-0.05	-2.07e-04	-1.13e-03	2.24e-04
21	20	9.81e-04	-5.15e-05	-0.05	-3.09e-04	-1.15e-03	-2.38e-06
21	21	9.81e-04	-5.15e-05	-0.05	-3.09e-04	-1.15e-03	-2.38e-06
21	22	9.81e-04	-5.15e-05	-0.05	-3.09e-04	-1.15e-03	-2.38e-06
22	1	-3.51e-04	5.03e-04	-0.07	4.64e-04	1.73e-03	-2.15e-06
22	2	-8.76e-05	-2.60e-05	-7.33e-03	2.86e-06	1.48e-05	-7.72e-06
22	3	-2.46e-04	3.32e-04	-0.05	3.10e-04	1.15e-03	-2.46e-06
22	4	0.10	-8.11e-03	-0.05	2.26e-04	1.35e-03	4.83e-04
22	5	-0.10	8.78e-03	-0.05	3.93e-04	9.55e-04	-4.88e-04
22	6	0.10	1.69e-03	-0.05	2.27e-04	1.35e-03	-5.41e-04
22	7	-0.10	-1.02e-03	-0.05	3.93e-04	9.61e-04	5.36e-04
22	8	-5.28e-03	0.10	-0.05	1.83e-04	1.22e-03	5.43e-04
22	9	4.79e-03	-0.10	-0.05	4.36e-04	1.09e-03	-5.48e-04
22	10	-6.11e-03	0.10	-0.05	1.79e-04	1.21e-03	-4.92e-04
22	11	5.62e-03	-0.10	-0.05	4.40e-04	1.09e-03	4.87e-04
22	12	0.05	-3.72e-03	-0.05	2.69e-04	1.25e-03	2.25e-04
22	13	-0.05	4.39e-03	-0.05	3.50e-04	1.06e-03	-2.29e-04
22	14	0.05	9.87e-04	-0.05	2.69e-04	1.25e-03	-2.56e-04
22	15	-0.05	-3.23e-04	-0.05	3.50e-04	1.06e-03	2.51e-04
22	16	-2.61e-03	0.05	-0.05	2.48e-04	1.18e-03	2.53e-04
22	17	2.12e-03	-0.05	-0.05	3.71e-04	1.12e-03	-2.58e-04
22	18	-3.06e-03	0.05	-0.05	2.47e-04	1.18e-03	-2.32e-04
22	19	2.57e-03	-0.05	-0.05	3.73e-04	1.12e-03	2.27e-04
22	20	-2.46e-04	3.32e-04	-0.05	3.10e-04	1.15e-03	-2.46e-06
22	21	-2.46e-04	3.32e-04	-0.05	3.10e-04	1.15e-03	-2.46e-06
22	22	-2.46e-04	3.32e-04	-0.05	3.10e-04	1.15e-03	-2.46e-06
23	1	-0.02	7.84e-03	-0.02	4.55e-04	1.70e-03	-1.48e-05
23	2	-5.24e-04	9.16e-05	-6.79e-03	-2.42e-06	-6.68e-06	-1.42e-05
23	3	-0.02	5.24e-03	-0.02	3.03e-04	1.13e-03	-1.18e-05
23	4	0.10	-0.07	-6.27e-03	3.26e-04	1.22e-03	4.83e-04
23	5	-0.13	0.08	-0.03	2.80e-04	1.05e-03	-5.07e-04
23	6	0.09	0.08	-6.49e-03	3.25e-04	1.21e-03	-5.57e-04
23	7	-0.12	-0.07	-0.03	2.81e-04	1.06e-03	5.33e-04
23	8	-0.04	0.14	-0.02	2.51e-04	1.14e-03	5.43e-04
23	9	8.83e-03	-0.13	-0.01	3.56e-04	1.13e-03	-5.67e-04
23	10	2.59e-03	0.13	-0.02	2.47e-04	1.13e-03	-5.09e-04
23	11	-0.04	-0.12	-0.01	3.59e-04	1.14e-03	4.85e-04
23	12	0.04	-0.03	-0.01	3.14e-04	1.17e-03	2.20e-04
23	13	-0.07	0.04	-0.02	2.92e-04	1.10e-03	-2.44e-04
23	14	0.03	0.04	-0.01	3.13e-04	1.17e-03	-2.68e-04
23	15	-0.07	-0.03	-0.02	2.93e-04	1.10e-03	2.44e-04
23	16	-0.03	0.07	-0.02	2.78e-04	1.14e-03	2.49e-04
23	17	-4.70e-03	-0.06	-0.01	3.28e-04	1.13e-03	-2.72e-04
23	18	-7.68e-03	0.06	-0.02	2.76e-04	1.13e-03	-2.45e-04
23	19	-0.03	-0.05	-0.01	3.30e-04	1.14e-03	2.21e-04
23	20	-0.02	5.24e-03	-0.02	3.03e-04	1.13e-03	-1.18e-05
23	21	-0.02	5.24e-03	-0.02	3.03e-04	1.13e-03	-1.18e-05
23	22	-0.02	5.24e-03	-0.02	3.03e-04	1.13e-03	-1.18e-05
24	1	-0.02	7.60e-03	-0.01	-4.53e-04	-1.73e-03	1.80e-06
24	2	-1.14e-04	-7.11e-05	-7.26e-03	2.23e-06	-1.58e-05	4.59e-06
24	3	-0.02	5.06e-03	-9.60e-03	-3.02e-04	-1.15e-03	1.81e-06
24	4	0.12	-0.07	6.21e-04	-2.86e-04	-1.07e-03	5.02e-04
24	5	-0.16	0.08	-0.02	-3.17e-04	-1.24e-03	-4.98e-04
24	6	0.12	0.08	3.44e-04	-2.87e-04	-1.07e-03	-5.46e-04
24	7	-0.15	-0.07	-0.02	-3.17e-04	-1.24e-03	5.49e-04
24	8	-0.04	0.17	-0.01	-3.55e-04	-1.14e-03	5.62e-04
24	9	9.92e-03	-0.16	-7.06e-03	-2.49e-04	-1.17e-03	-5.58e-04
24	10	3.08e-03	0.16	-0.01	-3.57e-04	-1.14e-03	-4.98e-04

24	11	-0.04	-0.15	-6.81e-03	-2.46e-04	-1.17e-03	5.01e-04
24	12	0.05	-0.03	-4.65e-03	-2.94e-04	-1.11e-03	2.37e-04
24	13	-0.09	0.04	-0.01	-3.09e-04	-1.20e-03	-2.33e-04
24	14	0.05	0.04	-4.77e-03	-2.95e-04	-1.11e-03	-2.55e-04
24	15	-0.08	-0.03	-0.01	-3.09e-04	-1.19e-03	2.59e-04
24	16	-0.03	0.08	-0.01	-3.27e-04	-1.15e-03	2.65e-04
24	17	-4.01e-03	-0.07	-8.38e-03	-2.76e-04	-1.16e-03	-2.61e-04
24	18	-7.26e-03	0.08	-0.01	-3.29e-04	-1.15e-03	-2.32e-04
24	19	-0.03	-0.07	-8.26e-03	-2.75e-04	-1.16e-03	2.36e-04
24	20	-0.02	5.06e-03	-9.60e-03	-3.02e-04	-1.15e-03	1.81e-06
24	21	-0.02	5.06e-03	-9.60e-03	-3.02e-04	-1.15e-03	1.81e-06
24	22	-0.02	5.06e-03	-9.60e-03	-3.02e-04	-1.15e-03	1.81e-06
25	1	-3.58e-04	4.91e-04	0.04	-4.55e-04	-1.70e-03	-5.82e-06
25	2	-7.20e-05	-3.31e-05	-7.72e-03	2.68e-06	9.58e-06	0.0
25	3	-2.48e-04	3.23e-04	0.02	-3.03e-04	-1.13e-03	-3.88e-06
25	4	0.14	-0.01	0.02	-3.07e-04	-1.07e-03	4.91e-04
25	5	-0.14	0.01	0.02	-2.98e-04	-1.19e-03	-4.99e-04
25	6	0.14	1.42e-03	0.02	-3.05e-04	-1.07e-03	-5.46e-04
25	7	-0.14	-7.72e-04	0.02	-3.01e-04	-1.19e-03	5.38e-04
25	8	-6.43e-03	0.14	0.02	-3.70e-04	-1.14e-03	5.50e-04
25	9	5.93e-03	-0.14	0.02	-2.35e-04	-1.13e-03	-5.58e-04
25	10	-8.36e-03	0.14	0.02	-3.72e-04	-1.14e-03	-4.99e-04
25	11	7.86e-03	-0.14	0.02	-2.33e-04	-1.12e-03	4.91e-04
25	12	0.07	-4.88e-03	0.02	-3.05e-04	-1.10e-03	2.29e-04
25	13	-0.07	5.52e-03	0.02	-3.01e-04	-1.16e-03	-2.36e-04
25	14	0.07	8.47e-04	0.02	-3.04e-04	-1.10e-03	-2.58e-04
25	15	-0.07	-2.02e-04	0.02	-3.02e-04	-1.16e-03	2.51e-04
25	16	-3.15e-03	0.07	0.02	-3.36e-04	-1.13e-03	2.56e-04
25	17	2.65e-03	-0.07	0.02	-2.70e-04	-1.13e-03	-2.64e-04
25	18	-4.15e-03	0.07	0.02	-3.36e-04	-1.13e-03	-2.36e-04
25	19	3.65e-03	-0.07	0.02	-2.69e-04	-1.13e-03	2.28e-04
25	20	-2.48e-04	3.23e-04	0.02	-3.03e-04	-1.13e-03	-3.88e-06
25	21	-2.48e-04	3.23e-04	0.02	-3.03e-04	-1.13e-03	-3.88e-06
25	22	-2.48e-04	3.23e-04	0.02	-3.03e-04	-1.13e-03	-3.88e-06
26	1	1.45e-03	-7.69e-05	0.04	4.55e-04	1.70e-03	-1.91e-06
26	2	-7.92e-05	-1.92e-05	-7.72e-03	-2.47e-06	-9.63e-06	1.10e-06
26	3	9.53e-04	-5.38e-05	0.02	3.03e-04	1.13e-03	-1.13e-06
26	4	0.14	9.32e-03	0.02	2.98e-04	1.20e-03	4.94e-04
26	5	-0.14	-9.42e-03	0.02	3.08e-04	1.06e-03	-4.97e-04
26	6	0.14	-0.01	0.02	3.01e-04	1.20e-03	-5.44e-04
26	7	-0.14	0.01	0.02	3.06e-04	1.06e-03	5.41e-04
26	8	-2.33e-03	0.14	0.02	2.40e-04	1.14e-03	5.53e-04
26	9	4.24e-03	-0.14	0.02	3.67e-04	1.12e-03	-5.56e-04
26	10	-7.68e-03	0.14	0.02	2.38e-04	1.14e-03	-4.96e-04
26	11	9.58e-03	-0.14	0.02	3.69e-04	1.12e-03	4.94e-04
26	12	0.07	4.40e-03	0.02	3.01e-04	1.16e-03	2.31e-04
26	13	-0.07	-4.51e-03	0.02	3.06e-04	1.10e-03	-2.34e-04
26	14	0.07	-5.05e-03	0.02	3.02e-04	1.16e-03	-2.56e-04
26	15	-0.07	4.94e-03	0.02	3.04e-04	1.10e-03	2.53e-04
26	16	-5.92e-04	0.07	0.02	2.72e-04	1.13e-03	2.59e-04
26	17	2.50e-03	-0.07	0.02	3.34e-04	1.13e-03	-2.61e-04
26	18	-3.21e-03	0.07	0.02	2.72e-04	1.13e-03	-2.33e-04
26	19	5.12e-03	-0.07	0.02	3.35e-04	1.13e-03	2.31e-04
26	20	9.53e-04	-5.38e-05	0.02	3.03e-04	1.13e-03	-1.13e-06
26	21	9.53e-04	-5.38e-05	0.02	3.03e-04	1.13e-03	-1.13e-06
26	22	9.53e-04	-5.38e-05	0.02	3.03e-04	1.13e-03	-1.13e-06
27	1	7.36e-03	-1.05e-03	-0.03	1.08e-04	3.93e-04	-3.10e-06
27	2	-1.76e-04	-7.16e-05	-7.24e-03	1.80e-06	0.0	0.0
27	3	4.88e-03	-7.12e-04	-0.02	7.25e-05	2.62e-04	-1.96e-06
27	4	0.15	-0.07	-0.01	6.17e-05	3.21e-04	4.93e-04
27	5	-0.14	0.06	-0.03	8.32e-05	2.03e-04	-4.97e-04
27	6	0.14	0.06	-0.01	6.40e-05	3.20e-04	-5.46e-04
27	7	-0.13	-0.06	-0.03	8.09e-05	2.04e-04	5.42e-04
27	8	-0.02	0.16	-0.02	-3.31e-06	2.54e-04	5.53e-04
27	9	0.03	-0.16	-0.02	1.48e-04	2.70e-04	-5.57e-04
27	10	0.02	0.15	-0.02	-4.70e-06	2.52e-04	-4.99e-04
27	11	-0.01	-0.15	-0.02	1.50e-04	2.71e-04	4.95e-04
27	12	0.07	-0.03	-0.02	6.71e-05	2.90e-04	2.30e-04
27	13	-0.06	0.03	-0.02	7.78e-05	2.34e-04	-2.34e-04
27	14	0.07	0.03	-0.02	6.84e-05	2.90e-04	-2.58e-04
27	15	-0.06	-0.03	-0.02	7.65e-05	2.34e-04	2.54e-04
27	16	-6.22e-03	0.08	-0.02	3.56e-05	2.58e-04	2.58e-04
27	17	0.02	-0.08	-0.02	1.09e-04	2.66e-04	-2.62e-04
27	18	0.01	0.07	-0.02	3.52e-05	2.57e-04	-2.35e-04
27	19	-3.18e-03	-0.07	-0.02	1.10e-04	2.66e-04	2.31e-04
27	20	4.88e-03	-7.12e-04	-0.02	7.25e-05	2.62e-04	-1.96e-06
27	21	4.88e-03	-7.12e-04	-0.02	7.25e-05	2.62e-04	-1.96e-06

27	22	4.88e-03	-7.12e-04	-0.02	7.25e-05	2.62e-04	-1.96e-06
28	1	-2.97e-03	1.49e-03	2.65e-03	-3.30e-05	-1.27e-04	-4.76e-06
28	2	-6.97e-05	-7.54e-05	-7.51e-03	0.0	0.0	0.0
28	3	-1.99e-03	9.81e-04	7.69e-04	-2.19e-05	-8.48e-05	-3.12e-06
28	4	0.14	-0.04	6.32e-03	-1.77e-05	-4.44e-06	4.99e-04
28	5	-0.15	0.04	-4.78e-03	-2.61e-05	-1.65e-04	-5.05e-04
28	6	0.14	0.04	6.17e-03	-1.87e-05	-6.60e-06	-5.52e-04
28	7	-0.14	-0.04	-4.63e-03	-2.52e-05	-1.63e-04	5.46e-04
28	8	-0.02	0.15	-5.54e-04	-8.89e-05	-7.52e-05	5.59e-04
28	9	0.01	-0.15	2.09e-03	4.50e-05	-9.44e-05	-5.65e-04
28	10	9.84e-03	0.15	-6.93e-04	-9.11e-05	-7.66e-05	-5.04e-04
28	11	-0.01	-0.14	2.23e-03	4.72e-05	-9.30e-05	4.98e-04
28	12	0.07	-0.02	3.46e-03	-1.99e-05	-4.57e-05	2.32e-04
28	13	-0.07	0.02	-1.92e-03	-2.40e-05	-1.24e-04	-2.39e-04
28	14	0.06	0.02	3.39e-03	-2.04e-05	-4.69e-05	-2.61e-04
28	15	-0.07	-0.02	-1.85e-03	-2.35e-05	-1.23e-04	2.55e-04
28	16	-9.63e-03	0.07	1.32e-04	-5.44e-05	-8.01e-05	2.61e-04
28	17	5.65e-03	-0.07	1.41e-03	1.05e-05	-8.95e-05	-2.67e-04
28	18	3.56e-03	0.07	6.70e-05	-5.54e-05	-8.08e-05	-2.38e-04
28	19	-7.54e-03	-0.07	1.47e-03	1.16e-05	-8.87e-05	2.32e-04
28	20	-1.99e-03	9.81e-04	7.69e-04	-2.19e-05	-8.48e-05	-3.12e-06
28	21	-1.99e-03	9.81e-04	7.69e-04	-2.19e-05	-8.48e-05	-3.12e-06
28	22	-1.99e-03	9.81e-04	7.69e-04	-2.19e-05	-8.48e-05	-3.12e-06
29	1	-0.05	0.02	-0.02	5.48e-06	-1.11e-05	3.36e-05
29	2	-1.00e-04	3.24e-04	-7.09e-03	2.13e-06	-1.35e-05	2.23e-05
29	3	-0.03	0.01	-0.01	3.94e-06	-9.18e-06	2.54e-05
29	4	0.09	-0.06	-2.74e-03	-1.68e-05	4.88e-05	5.25e-04
29	5	-0.16	0.08	-0.02	2.46e-05	-6.72e-05	-4.75e-04
29	6	0.09	0.08	-3.00e-03	-1.38e-05	4.79e-05	-5.22e-04
29	7	-0.15	-0.06	-0.02	2.16e-05	-6.62e-05	5.73e-04
29	8	-0.06	0.16	-0.02	-8.32e-05	-1.71e-05	5.86e-04
29	9	-8.68e-03	-0.14	-0.01	9.11e-05	-1.26e-06	-5.36e-04
29	10	-0.02	0.15	-0.02	-8.43e-05	-1.89e-05	-4.74e-04
29	11	-0.05	-0.13	-9.98e-03	9.21e-05	0.0	5.25e-04
29	12	0.03	-0.02	-7.95e-03	-6.31e-06	1.89e-05	2.60e-04
29	13	-0.10	0.05	-0.02	1.42e-05	-3.73e-05	-2.09e-04
29	14	0.02	0.05	-8.07e-03	-4.46e-06	1.86e-05	-2.32e-04
29	15	-0.09	-0.02	-0.02	1.23e-05	-3.70e-05	2.82e-04
29	16	-0.05	0.08	-0.01	-3.86e-05	-1.30e-05	2.89e-04
29	17	-0.02	-0.06	-0.01	4.64e-05	-5.32e-06	-2.38e-04
29	18	-0.03	0.07	-0.01	-3.85e-05	-1.38e-05	-2.09e-04
29	19	-0.04	-0.05	-0.01	4.64e-05	-4.60e-06	2.59e-04
29	20	-0.03	0.01	-0.01	3.94e-06	-9.18e-06	2.54e-05
29	21	-0.03	0.01	-0.01	3.94e-06	-9.18e-06	2.54e-05
29	22	-0.03	0.01	-0.01	3.94e-06	-9.18e-06	2.54e-05
30	1	-6.61e-03	1.54e-03	-7.55e-03	9.29e-05	3.96e-04	-4.12e-06
30	2	-4.18e-04	7.34e-05	-6.36e-03	-2.26e-06	-3.96e-06	-4.27e-06
30	3	-4.46e-03	1.03e-03	-5.88e-03	6.16e-05	2.63e-04	-3.31e-06
30	4	0.10	0.06	-0.01	7.96e-05	3.64e-04	4.82e-04
30	5	-0.11	-0.06	2.40e-03	4.37e-05	1.62e-04	-4.89e-04
30	6	0.10	-0.07	-0.01	7.96e-05	3.61e-04	-5.35e-04
30	7	-0.11	0.07	2.21e-03	4.37e-05	1.65e-04	5.29e-04
30	8	0.01	0.12	-4.39e-03	-4.22e-05	2.38e-04	5.44e-04
30	9	-0.02	-0.12	-7.36e-03	1.65e-04	2.89e-04	-5.50e-04
30	10	-0.02	0.13	-4.18e-03	-4.70e-05	2.35e-04	-4.87e-04
30	11	0.01	-0.13	-7.57e-03	1.70e-04	2.91e-04	4.81e-04
30	12	0.05	0.03	-9.89e-03	7.03e-05	3.12e-04	2.24e-04
30	13	-0.05	-0.03	-1.86e-03	5.29e-05	2.14e-04	-2.31e-04
30	14	0.05	-0.03	-9.81e-03	6.99e-05	3.11e-04	-2.53e-04
30	15	-0.06	0.04	-1.95e-03	5.34e-05	2.16e-04	2.47e-04
30	16	2.69e-03	0.06	-5.16e-03	1.16e-05	2.51e-04	2.54e-04
30	17	-0.01	-0.06	-6.59e-03	1.12e-04	2.76e-04	-2.61e-04
30	18	-0.01	0.06	-5.07e-03	8.85e-06	2.50e-04	-2.29e-04
30	19	4.51e-03	-0.06	-6.69e-03	1.14e-04	2.77e-04	2.23e-04
30	20	-4.46e-03	1.03e-03	-5.88e-03	6.16e-05	2.63e-04	-3.31e-06
30	21	-4.46e-03	1.03e-03	-5.88e-03	6.16e-05	2.63e-04	-3.31e-06
30	22	-4.46e-03	1.03e-03	-5.88e-03	6.16e-05	2.63e-04	-3.31e-06
31	1	0.03	-7.10e-03	-0.02	-4.57e-04	-1.70e-03	6.79e-06
31	2	4.11e-04	2.16e-05	-6.79e-03	1.25e-06	7.00e-06	1.53e-05
31	3	0.02	-4.73e-03	-0.02	-3.05e-04	-1.13e-03	6.57e-06
31	4	0.12	0.07	-0.03	-3.14e-04	-1.05e-03	5.02e-04
31	5	-0.09	-0.08	-6.05e-03	-2.96e-04	-1.22e-03	-4.89e-04
31	6	0.13	-0.09	-0.03	-3.12e-04	-1.05e-03	-5.37e-04
31	7	-0.09	0.08	-6.30e-03	-2.98e-04	-1.21e-03	5.50e-04
31	8	0.04	0.13	-0.01	-3.56e-04	-1.15e-03	5.62e-04
31	9	-3.86e-04	-0.13	-0.02	-2.53e-04	-1.12e-03	-5.49e-04
31	10	-3.82e-03	0.13	-0.01	-3.56e-04	-1.15e-03	-4.89e-04

31	11	0.04	-0.14	-0.02	-2.53e-04	-1.12e-03	5.02e-04
31	12	0.07	0.03	-0.02	-3.09e-04	-1.09e-03	2.39e-04
31	13	-0.03	-0.04	-0.01	-3.00e-04	-1.18e-03	-2.26e-04
31	14	0.07	-0.04	-0.02	-3.08e-04	-1.10e-03	-2.49e-04
31	15	-0.04	0.03	-0.01	-3.02e-04	-1.17e-03	2.62e-04
31	16	0.03	0.06	-0.01	-3.30e-04	-1.14e-03	2.68e-04
31	17	9.07e-03	-0.07	-0.02	-2.80e-04	-1.13e-03	-2.55e-04
31	18	7.43e-03	0.06	-0.01	-3.29e-04	-1.14e-03	-2.26e-04
31	19	0.03	-0.07	-0.02	-2.80e-04	-1.13e-03	2.39e-04
31	20	0.02	-4.73e-03	-0.02	-3.05e-04	-1.13e-03	6.57e-06
31	21	0.02	-4.73e-03	-0.02	-3.05e-04	-1.13e-03	6.57e-06
31	22	0.02	-4.73e-03	-0.02	-3.05e-04	-1.13e-03	6.57e-06
32	1	7.71e-03	-1.19e-03	-7.56e-03	-1.18e-04	-3.89e-04	-4.05e-06
32	2	2.26e-04	-2.57e-04	-6.35e-03	0.0	4.58e-06	5.44e-06
32	3	5.17e-03	-8.31e-04	-5.89e-03	-7.84e-05	-2.59e-04	-1.97e-06
32	4	0.11	-0.07	2.06e-03	-9.23e-05	-1.39e-04	4.82e-04
32	5	-0.10	0.06	-0.01	-6.44e-05	-3.79e-04	-4.86e-04
32	6	0.11	0.06	1.87e-03	-8.80e-05	-1.42e-04	-5.38e-04
32	7	-0.10	-0.07	-0.01	-6.88e-05	-3.76e-04	5.34e-04
32	8	-0.02	0.13	-8.51e-03	-1.65e-04	-2.37e-04	5.41e-04
32	9	0.03	-0.13	-3.26e-03	8.28e-06	-2.81e-04	-5.45e-04
32	10	0.02	0.12	-8.74e-03	-1.66e-04	-2.39e-04	-4.92e-04
32	11	-0.01	-0.12	-3.03e-03	9.49e-06	-2.78e-04	4.88e-04
32	12	0.06	-0.03	-2.04e-03	-8.52e-05	-2.01e-04	2.24e-04
32	13	-0.05	0.03	-9.74e-03	-7.15e-05	-3.17e-04	-2.28e-04
32	14	0.05	0.03	-2.12e-03	-8.28e-05	-2.02e-04	-2.54e-04
32	15	-0.04	-0.03	-9.66e-03	-7.40e-05	-3.15e-04	2.50e-04
32	16	-5.41e-03	0.06	-7.16e-03	-1.21e-04	-2.48e-04	2.52e-04
32	17	0.02	-0.06	-4.62e-03	-3.61e-05	-2.70e-04	-2.56e-04
32	18	0.01	0.05	-7.26e-03	-1.21e-04	-2.49e-04	-2.32e-04
32	19	-2.75e-03	-0.06	-4.52e-03	-3.61e-05	-2.68e-04	2.29e-04
32	20	5.17e-03	-8.31e-04	-5.89e-03	-7.84e-05	-2.59e-04	-1.97e-06
32	21	5.17e-03	-8.31e-04	-5.89e-03	-7.84e-05	-2.59e-04	-1.97e-06
32	22	5.17e-03	-8.31e-04	-5.89e-03	-7.84e-05	-2.59e-04	-1.97e-06
33	1	-3.03e-03	1.57e-03	-0.04	4.15e-05	1.19e-04	1.05e-06
33	2	-1.48e-04	6.91e-06	-7.49e-03	1.02e-05	-1.08e-05	-5.53e-06
33	3	-2.04e-03	1.05e-03	-0.03	2.90e-05	7.82e-05	0.0
33	4	0.10	-0.04	-0.02	-2.18e-05	5.11e-05	5.12e-04
33	5	-0.11	0.04	-0.03	7.99e-05	1.05e-04	-5.12e-04
33	6	0.10	0.04	-0.02	-2.08e-05	5.27e-05	-5.57e-04
33	7	-0.10	-0.04	-0.03	7.88e-05	1.04e-04	5.57e-04
33	8	-0.02	0.11	-0.03	-5.50e-05	4.41e-05	5.73e-04
33	9	0.01	-0.11	-0.03	1.13e-04	1.12e-04	-5.73e-04
33	10	8.96e-03	0.11	-0.03	-5.70e-05	4.47e-05	-5.08e-04
33	11	-0.01	-0.11	-0.03	1.15e-04	1.12e-04	5.08e-04
33	12	0.05	-0.02	-0.02	4.22e-06	6.49e-05	2.41e-04
33	13	-0.05	0.02	-0.03	5.38e-05	9.15e-05	-2.41e-04
33	14	0.05	0.02	-0.02	4.82e-06	6.60e-05	-2.61e-04
33	15	-0.05	-0.02	-0.03	5.32e-05	9.04e-05	2.61e-04
33	16	-9.14e-03	0.06	-0.03	-1.18e-05	6.15e-05	2.70e-04
33	17	5.07e-03	-0.05	-0.03	6.99e-05	9.49e-05	-2.70e-04
33	18	3.11e-03	0.05	-0.03	-1.26e-05	6.21e-05	-2.37e-04
33	19	-7.18e-03	-0.05	-0.03	7.07e-05	9.42e-05	2.37e-04
33	20	-2.04e-03	1.05e-03	-0.03	2.90e-05	7.82e-05	0.0
33	21	-2.04e-03	1.05e-03	-0.03	2.90e-05	7.82e-05	0.0
33	22	-2.04e-03	1.05e-03	-0.03	2.90e-05	7.82e-05	0.0
34	1	-2.85e-03	-1.38e-03	2.65e-03	6.24e-05	-1.11e-04	-3.07e-06
34	2	-3.61e-05	-5.72e-05	-7.51e-03	-1.01e-06	0.0	0.0
34	3	-1.90e-03	-9.25e-04	7.63e-04	4.14e-05	-7.41e-05	-1.94e-06
34	4	0.14	-0.04	5.78e-03	2.51e-05	1.77e-05	4.95e-04
34	5	-0.14	0.04	-4.25e-03	5.78e-05	-1.66e-04	-4.99e-04
34	6	0.14	0.03	5.71e-03	2.40e-05	1.65e-05	-5.46e-04
34	7	-0.14	-0.03	-4.18e-03	5.89e-05	-1.65e-04	5.42e-04
34	8	0.02	0.15	3.53e-03	-2.60e-05	-7.76e-05	5.54e-04
34	9	-0.02	-0.15	-2.01e-03	1.09e-04	-7.07e-05	-5.58e-04
34	10	-0.03	0.14	3.57e-03	-2.84e-05	-8.28e-05	-4.99e-04
34	11	0.02	-0.15	-2.04e-03	1.11e-04	-6.55e-05	4.95e-04
34	12	0.07	-0.02	3.20e-03	3.35e-05	-2.97e-05	2.31e-04
34	13	-0.07	0.02	-1.67e-03	4.94e-05	-1.19e-04	-2.35e-04
34	14	0.07	0.01	3.17e-03	3.29e-05	-3.00e-05	-2.57e-04
34	15	-0.07	-0.02	-1.64e-03	5.00e-05	-1.18e-04	2.53e-04
34	16	6.37e-03	0.07	2.11e-03	8.80e-06	-7.58e-05	2.59e-04
34	17	-0.01	-0.07	-5.83e-04	7.41e-05	-7.25e-05	-2.63e-04
34	18	-0.01	0.07	2.13e-03	7.57e-06	-7.82e-05	-2.35e-04
34	19	9.03e-03	-0.07	-6.00e-04	7.53e-05	-7.00e-05	2.31e-04
34	20	-1.90e-03	-9.25e-04	7.63e-04	4.14e-05	-7.41e-05	-1.94e-06
34	21	-1.90e-03	-9.25e-04	7.63e-04	4.14e-05	-7.41e-05	-1.94e-06

34	22	-1.90e-03	-9.25e-04	7.63e-04	4.14e-05	-7.41e-05	-1.94e-06
35	1	-0.04	-0.03	-0.02	0.0	-3.06e-05	-3.60e-05
35	2	8.24e-04	4.35e-05	-7.10e-03	7.36e-06	-2.83e-05	-1.81e-05
35	3	-0.03	-0.02	-0.01	1.23e-06	-2.42e-05	-2.64e-05
35	4	0.09	-0.08	-3.81e-03	1.32e-05	7.29e-06	4.69e-04
35	5	-0.15	0.05	-0.02	-1.08e-05	-5.57e-05	-5.22e-04
35	6	0.10	0.05	-3.96e-03	1.19e-05	5.04e-06	-5.72e-04
35	7	-0.16	-0.08	-0.02	-9.48e-06	-5.34e-05	5.19e-04
35	8	7.75e-03	0.13	-7.73e-03	-6.23e-05	-9.48e-06	5.29e-04
35	9	-0.07	-0.16	-0.02	6.48e-05	-3.89e-05	-5.81e-04
35	10	-0.07	0.12	-7.66e-03	-6.49e-05	-1.24e-05	-5.24e-04
35	11	9.31e-03	-0.15	-0.02	6.73e-05	-3.59e-05	4.72e-04
35	12	0.03	-0.05	-8.48e-03	7.01e-06	-8.74e-06	2.05e-04
35	13	-0.09	0.01	-0.02	-4.55e-06	-3.96e-05	-2.58e-04
35	14	0.03	0.01	-8.54e-03	6.30e-06	-1.03e-05	-2.83e-04
35	15	-0.09	-0.05	-0.02	-3.85e-06	-3.80e-05	2.30e-04
35	16	-0.01	0.05	-0.01	-2.95e-05	-1.71e-05	2.34e-04
35	17	-0.05	-0.09	-0.02	3.20e-05	-3.13e-05	-2.87e-04
35	18	-0.05	0.05	-0.01	-3.08e-05	-1.88e-05	-2.60e-04
35	19	-0.01	-0.08	-0.02	3.33e-05	-2.96e-05	2.07e-04
35	20	-0.03	-0.02	-0.01	1.23e-06	-2.42e-05	-2.64e-05
35	21	-0.03	-0.02	-0.01	1.23e-06	-2.42e-05	-2.64e-05
35	22	-0.03	-0.02	-0.01	1.23e-06	-2.42e-05	-2.64e-05
36	1	0.03	-7.07e-03	-0.01	4.71e-04	1.72e-03	-9.93e-06
36	2	-2.06e-05	8.42e-05	-7.26e-03	9.85e-06	1.26e-05	-3.43e-06
36	3	0.02	-4.70e-03	-9.60e-03	3.15e-04	1.15e-03	-7.07e-06
36	4	0.15	0.07	-0.02	3.22e-04	1.23e-03	4.93e-04
36	5	-0.12	-0.08	6.12e-04	3.09e-04	1.07e-03	-5.07e-04
36	6	0.15	-0.09	-0.02	3.12e-04	1.23e-03	-5.55e-04
36	7	-0.12	0.08	3.57e-04	3.18e-04	1.07e-03	5.40e-04
36	8	0.03	0.15	-6.96e-03	2.55e-04	1.12e-03	5.52e-04
36	9	-8.13e-05	-0.16	-0.01	3.76e-04	1.18e-03	-5.66e-04
36	10	-5.39e-03	0.16	-6.68e-03	2.53e-04	1.12e-03	-5.07e-04
36	11	0.04	-0.17	-0.01	3.78e-04	1.18e-03	4.93e-04
36	12	0.08	0.03	-0.01	3.19e-04	1.19e-03	2.27e-04
36	13	-0.05	-0.04	-4.65e-03	3.12e-04	1.11e-03	-2.42e-04
36	14	0.08	-0.04	-0.01	3.14e-04	1.19e-03	-2.64e-04
36	15	-0.05	0.03	-4.76e-03	3.17e-04	1.11e-03	2.50e-04
36	16	0.03	0.07	-8.33e-03	2.86e-04	1.14e-03	2.55e-04
36	17	9.02e-03	-0.08	-0.01	3.45e-04	1.16e-03	-2.69e-04
36	18	6.43e-03	0.08	-8.19e-03	2.85e-04	1.14e-03	-2.42e-04
36	19	0.03	-0.08	-0.01	3.45e-04	1.16e-03	2.28e-04
36	20	0.02	-4.70e-03	-9.60e-03	3.15e-04	1.15e-03	-7.07e-06
36	21	0.02	-4.70e-03	-9.60e-03	3.15e-04	1.15e-03	-7.07e-06
36	22	0.02	-4.70e-03	-9.60e-03	3.15e-04	1.15e-03	-7.07e-06
37	1	4.19e-03	-1.04e-03	-0.04	-2.36e-05	-1.24e-04	-8.99e-06
37	2	2.15e-05	5.74e-05	-7.49e-03	1.42e-05	4.23e-06	6.66e-06
37	3	2.80e-03	-6.83e-04	-0.03	-1.39e-05	-8.21e-05	-5.10e-06
37	4	0.11	0.04	-0.03	-1.94e-05	-9.24e-05	5.05e-04
37	5	-0.10	-0.04	-0.02	-8.34e-06	-7.19e-05	-5.15e-04
37	6	0.10	-0.05	-0.03	-1.70e-05	-9.36e-05	-5.65e-04
37	7	-0.10	0.05	-0.02	-1.07e-05	-7.07e-05	5.55e-04
37	8	0.01	0.11	-0.03	-7.76e-05	2.73e-06	5.65e-04
37	9	-5.14e-03	-0.11	-0.03	4.99e-05	-1.67e-04	-5.75e-04
37	10	-9.99e-03	0.11	-0.02	-7.91e-05	6.50e-06	-5.19e-04
37	11	0.02	-0.12	-0.03	5.14e-05	-1.71e-04	5.09e-04
37	12	0.05	0.02	-0.03	-1.66e-05	-8.70e-05	2.34e-04
37	13	-0.05	-0.02	-0.02	-1.11e-05	-7.72e-05	-2.44e-04
37	14	0.05	-0.02	-0.03	-1.54e-05	-8.74e-05	-2.68e-04
37	15	-0.05	0.02	-0.02	-1.23e-05	-7.69e-05	2.58e-04
37	16	6.52e-03	0.05	-0.03	-4.48e-05	-4.12e-05	2.62e-04
37	17	-9.33e-04	-0.05	-0.03	1.71e-05	-1.23e-04	-2.72e-04
37	18	-3.28e-03	0.06	-0.03	-4.54e-05	-3.91e-05	-2.47e-04
37	19	8.87e-03	-0.06	-0.03	1.77e-05	-1.25e-04	2.37e-04
37	20	2.80e-03	-6.83e-04	-0.03	-1.39e-05	-8.21e-05	-5.10e-06
37	21	2.80e-03	-6.83e-04	-0.03	-1.39e-05	-8.21e-05	-5.10e-06
37	22	2.80e-03	-6.83e-04	-0.03	-1.39e-05	-8.21e-05	-5.10e-06
38	1	-6.26e-03	1.49e-03	-0.03	-1.03e-04	-3.94e-04	-5.03e-06
38	2	2.72e-05	3.18e-05	-7.24e-03	1.10e-06	-1.70e-06	0.0
38	3	-4.17e-03	9.98e-04	-0.02	-6.83e-05	-2.63e-04	-3.30e-06
38	4	0.14	0.06	-0.03	-7.27e-05	-2.00e-04	4.93e-04
38	5	-0.14	-0.06	-0.01	-6.38e-05	-3.26e-04	-5.00e-04
38	6	0.14	-0.07	-0.03	-7.27e-05	-2.00e-04	-5.47e-04
38	7	-0.14	0.08	-0.01	-6.38e-05	-3.26e-04	5.41e-04
38	8	0.01	0.15	-0.02	-1.38e-04	-2.47e-04	5.53e-04
38	9	-0.02	-0.15	-0.02	1.87e-06	-2.79e-04	-5.60e-04
38	10	-0.02	0.16	-0.02	-1.41e-04	-2.46e-04	-4.99e-04

38	11	0.02	-0.16	-0.02	4.65e-06	-2.81e-04	4.93e-04
38	12	0.06	0.03	-0.02	-7.04e-05	-2.33e-04	2.29e-04
38	13	-0.07	-0.03	-0.02	-6.61e-05	-2.94e-04	-2.36e-04
38	14	0.06	-0.03	-0.02	-7.04e-05	-2.32e-04	-2.59e-04
38	15	-0.07	0.04	-0.02	-6.61e-05	-2.94e-04	2.52e-04
38	16	2.55e-03	0.07	-0.02	-1.02e-04	-2.55e-04	2.58e-04
38	17	-0.01	-0.07	-0.02	-3.43e-05	-2.71e-04	-2.65e-04
38	18	-0.01	0.08	-0.02	-1.04e-04	-2.55e-04	-2.36e-04
38	19	5.43e-03	-0.08	-0.02	-3.29e-05	-2.72e-04	2.29e-04
38	20	-4.17e-03	9.98e-04	-0.02	-6.83e-05	-2.63e-04	-3.30e-06
38	21	-4.17e-03	9.98e-04	-0.02	-6.83e-05	-2.63e-04	-3.30e-06
38	22	-4.17e-03	9.98e-04	-0.02	-6.83e-05	-2.63e-04	-3.30e-06
39	1	4.06e-03	-1.07e-03	2.66e-03	3.49e-05	1.27e-04	-3.38e-06
39	2	-8.15e-05	2.39e-05	-7.51e-03	0.0	0.0	0.0
39	3	2.70e-03	-7.11e-04	7.73e-04	2.34e-05	8.43e-05	-2.15e-06
39	4	0.14	0.04	-4.74e-03	2.87e-05	1.59e-04	4.99e-04
39	5	-0.14	-0.04	6.29e-03	1.81e-05	9.24e-06	-5.03e-04
39	6	0.14	-0.05	-4.60e-03	2.67e-05	1.57e-04	-5.52e-04
39	7	-0.14	0.05	6.15e-03	2.00e-05	1.17e-05	5.47e-04
39	8	9.56e-03	0.14	2.26e-03	-4.91e-05	7.33e-05	5.59e-04
39	9	-4.17e-03	-0.14	-7.12e-04	9.58e-05	9.54e-05	-5.63e-04
39	10	-0.01	0.15	2.41e-03	-5.17e-05	7.22e-05	-5.04e-04
39	11	0.02	-0.15	-8.61e-04	9.85e-05	9.65e-05	5.00e-04
39	12	0.07	0.02	-1.90e-03	2.59e-05	1.21e-04	2.33e-04
39	13	-0.07	-0.02	3.45e-03	2.09e-05	4.78e-05	-2.37e-04
39	14	0.07	-0.02	-1.84e-03	2.49e-05	1.20e-04	-2.60e-04
39	15	-0.07	0.02	3.38e-03	2.18e-05	4.92e-05	2.56e-04
39	16	5.92e-03	0.07	1.49e-03	-1.17e-05	7.92e-05	2.61e-04
39	17	-5.21e-04	-0.07	5.79e-05	5.85e-05	8.95e-05	-2.65e-04
39	18	-4.21e-03	0.07	1.56e-03	-1.30e-05	7.85e-05	-2.37e-04
39	19	9.60e-03	-0.08	-1.25e-05	5.97e-05	9.02e-05	2.33e-04
39	20	2.70e-03	-7.11e-04	7.73e-04	2.34e-05	8.43e-05	-2.15e-06
39	21	2.70e-03	-7.11e-04	7.73e-04	2.34e-05	8.43e-05	-2.15e-06
39	22	2.70e-03	-7.11e-04	7.73e-04	2.34e-05	8.43e-05	-2.15e-06
40	1	0.05	-0.01	-0.02	1.03e-05	6.88e-06	-4.16e-05
40	2	1.63e-04	4.34e-04	-7.09e-03	8.62e-06	1.07e-05	-2.11e-05
40	3	0.04	-9.09e-03	-0.01	8.01e-06	6.01e-06	-3.06e-05
40	4	0.16	0.06	-0.02	1.42e-06	6.80e-05	4.70e-04
40	5	-0.09	-0.08	-2.69e-03	1.46e-05	-5.59e-05	-5.31e-04
40	6	0.16	-0.09	-0.02	1.67e-05	6.82e-05	-5.77e-04
40	7	-0.09	0.07	-2.95e-03	0.0	-5.62e-05	5.16e-04
40	8	0.05	0.13	-0.01	-7.37e-05	2.94e-05	5.28e-04
40	9	0.02	-0.15	-0.02	8.97e-05	-1.73e-05	-5.89e-04
40	10	0.01	0.14	-0.01	-7.72e-05	3.11e-05	-5.32e-04
40	11	0.06	-0.16	-0.02	9.32e-05	-1.90e-05	4.70e-04
40	12	0.09	0.02	-0.02	4.91e-06	3.59e-05	2.04e-04
40	13	-0.02	-0.04	-7.92e-03	1.11e-05	-2.39e-05	-2.66e-04
40	14	0.10	-0.05	-0.02	1.21e-05	3.64e-05	-2.87e-04
40	15	-0.03	0.03	-8.04e-03	3.94e-06	-2.44e-05	2.26e-04
40	16	0.04	0.06	-0.01	-3.14e-05	1.72e-05	2.31e-04
40	17	0.03	-0.07	-0.01	4.74e-05	-5.17e-06	-2.93e-04
40	18	0.02	0.06	-0.01	-3.33e-05	1.83e-05	-2.66e-04
40	19	0.05	-0.08	-0.01	4.94e-05	-6.29e-06	2.04e-04
40	20	0.04	-9.09e-03	-0.01	8.01e-06	6.01e-06	-3.06e-05
40	21	0.04	-9.09e-03	-0.01	8.01e-06	6.01e-06	-3.06e-05
40	22	0.04	-9.09e-03	-0.01	8.01e-06	6.01e-06	-3.06e-05
41	1	1.38e-03	-3.01e-04	-0.07	-8.87e-04	-1.54e-03	-1.10e-05
41	2	-7.28e-05	-1.97e-05	-7.33e-03	-9.93e-06	-1.36e-05	1.44e-05
41	3	9.13e-04	-2.04e-04	-0.05	-5.93e-04	-1.03e-03	-5.38e-06
41	4	0.10	7.14e-03	-0.05	-4.73e-04	-8.48e-04	5.00e-04
41	5	-0.10	-7.55e-03	-0.05	-7.12e-04	-1.21e-03	-5.11e-04
41	6	0.10	-9.11e-03	-0.05	-4.80e-04	-8.56e-04	-5.71e-04
41	7	-0.10	8.70e-03	-0.05	-7.05e-04	-1.20e-03	5.60e-04
41	8	8.65e-05	0.10	-0.05	-8.27e-04	-1.14e-03	5.64e-04
41	9	1.74e-03	-0.10	-0.05	-3.59e-04	-9.14e-04	-5.75e-04
41	10	-5.92e-03	0.10	-0.05	-8.36e-04	-1.15e-03	-5.12e-04
41	11	7.74e-03	-0.10	-0.05	-3.49e-04	-9.07e-04	5.01e-04
41	12	0.05	3.27e-03	-0.05	-5.35e-04	-9.40e-04	2.30e-04
41	13	-0.05	-3.68e-03	-0.05	-6.51e-04	-1.11e-03	-2.41e-04
41	14	0.05	-4.37e-03	-0.05	-5.38e-04	-9.45e-04	-2.73e-04
41	15	-0.05	3.96e-03	-0.05	-6.47e-04	-1.11e-03	2.62e-04
41	16	5.29e-04	0.05	-0.05	-7.06e-04	-1.08e-03	2.63e-04
41	17	1.30e-03	-0.05	-0.05	-4.80e-04	-9.73e-04	-2.74e-04
41	18	-2.37e-03	0.05	-0.05	-7.11e-04	-1.09e-03	-2.42e-04
41	19	4.20e-03	-0.05	-0.05	-4.75e-04	-9.69e-04	2.31e-04
41	20	9.13e-04	-2.04e-04	-0.05	-5.93e-04	-1.03e-03	-5.38e-06
41	21	9.13e-04	-2.04e-04	-0.05	-5.93e-04	-1.03e-03	-5.38e-06

41	22	9.13e-04	-2.04e-04	-0.05	-5.93e-04	-1.03e-03	-5.38e-06
42	1	-2.45e-04	7.29e-04	-0.07	8.93e-04	1.55e-03	-3.45e-06
42	2	-8.95e-05	-2.45e-05	-7.33e-03	5.56e-06	1.06e-05	0.0
42	3	-1.75e-04	4.83e-04	-0.05	5.96e-04	1.03e-03	-2.36e-06
42	4	0.10	-7.65e-03	-0.05	5.15e-04	1.21e-03	5.02e-04
42	5	-0.10	8.61e-03	-0.05	6.78e-04	8.59e-04	-5.07e-04
42	6	0.10	-4.76e-04	-0.05	5.16e-04	1.20e-03	-5.43e-04
42	7	-0.10	1.44e-03	-0.05	6.77e-04	8.63e-04	5.39e-04
42	8	-6.55e-03	0.10	-0.05	4.60e-04	1.10e-03	5.59e-04
42	9	6.20e-03	-0.10	-0.05	7.32e-04	9.67e-04	-5.64e-04
42	10	-6.22e-03	0.10	-0.05	4.56e-04	1.10e-03	-4.96e-04
42	11	5.87e-03	-0.10	-0.05	7.36e-04	9.69e-04	4.91e-04
42	12	0.05	-3.42e-03	-0.05	5.56e-04	1.12e-03	2.36e-04
42	13	-0.05	4.39e-03	-0.05	6.36e-04	9.48e-04	-2.41e-04
42	14	0.05	1.48e-05	-0.05	5.57e-04	1.11e-03	-2.55e-04
42	15	-0.05	9.50e-04	-0.05	6.35e-04	9.50e-04	2.50e-04
42	16	-3.16e-03	0.05	-0.05	5.30e-04	1.06e-03	2.62e-04
42	17	2.81e-03	-0.05	-0.05	6.62e-04	1.00e-03	-2.67e-04
42	18	-3.06e-03	0.05	-0.05	5.28e-04	1.06e-03	-2.33e-04
42	19	2.71e-03	-0.05	-0.05	6.64e-04	1.00e-03	2.28e-04
42	20	-1.75e-04	4.83e-04	-0.05	5.96e-04	1.03e-03	-2.36e-06
42	21	-1.75e-04	4.83e-04	-0.05	5.96e-04	1.03e-03	-2.36e-06
42	22	-1.75e-04	4.83e-04	-0.05	5.96e-04	1.03e-03	-2.36e-06
43	1	-0.02	0.01	-0.02	8.77e-04	1.52e-03	-8.81e-06
43	2	-3.74e-04	1.00e-04	-6.98e-03	-6.29e-06	-9.46e-06	-5.23e-06
43	3	-0.01	9.39e-03	-0.02	5.84e-04	1.01e-03	-6.57e-06
43	4	0.10	-0.06	-7.28e-03	5.91e-04	1.10e-03	4.89e-04
43	5	-0.13	0.08	-0.03	5.77e-04	9.29e-04	-5.02e-04
43	6	0.10	0.08	-7.52e-03	5.87e-04	1.10e-03	-5.52e-04
43	7	-0.12	-0.06	-0.02	5.81e-04	9.31e-04	5.39e-04
43	8	-0.06	0.14	-0.02	5.09e-04	1.02e-03	5.49e-04
43	9	0.03	-0.12	-0.01	6.59e-04	1.01e-03	-5.62e-04
43	10	0.02	0.13	-0.02	5.07e-04	1.02e-03	-5.04e-04
43	11	-0.05	-0.11	-0.01	6.61e-04	1.01e-03	4.91e-04
43	12	0.04	-0.02	-0.01	5.87e-04	1.05e-03	2.26e-04
43	13	-0.07	0.04	-0.02	5.80e-04	9.72e-04	-2.39e-04
43	14	0.04	0.04	-0.01	5.85e-04	1.05e-03	-2.63e-04
43	15	-0.07	-0.02	-0.02	5.82e-04	9.73e-04	2.50e-04
43	16	-0.04	0.07	-0.02	5.48e-04	1.02e-03	2.54e-04
43	17	6.66e-03	-0.06	-0.01	6.20e-04	1.01e-03	-2.67e-04
43	18	2.46e-03	0.07	-0.02	5.47e-04	1.02e-03	-2.40e-04
43	19	-0.03	-0.05	-0.01	6.21e-04	1.01e-03	2.27e-04
43	20	-0.01	9.39e-03	-0.02	5.84e-04	1.01e-03	-6.57e-06
43	21	-0.01	9.39e-03	-0.02	5.84e-04	1.01e-03	-6.57e-06
43	22	-0.01	9.39e-03	-0.02	5.84e-04	1.01e-03	-6.57e-06
44	1	-0.02	0.01	-0.01	-8.81e-04	-1.54e-03	0.0
44	2	-2.27e-04	-1.05e-05	-7.18e-03	1.72e-06	-4.33e-06	2.82e-06
44	3	-0.01	9.26e-03	-9.51e-03	-5.87e-04	-1.03e-03	0.0
44	4	0.13	-0.06	-3.80e-04	-5.96e-04	-9.43e-04	4.98e-04
44	5	-0.16	0.08	-0.02	-5.79e-04	-1.11e-03	-4.99e-04
44	6	0.12	0.08	-6.72e-04	-5.94e-04	-9.46e-04	-5.47e-04
44	7	-0.15	-0.06	-0.02	-5.81e-04	-1.10e-03	5.47e-04
44	8	-0.06	0.17	-0.01	-6.61e-04	-1.01e-03	5.58e-04
44	9	0.03	-0.15	-4.49e-03	-5.13e-04	-1.04e-03	-5.59e-04
44	10	0.02	0.16	-0.01	-6.62e-04	-1.01e-03	-4.99e-04
44	11	-0.05	-0.14	-4.21e-03	-5.13e-04	-1.04e-03	4.99e-04
44	12	0.06	-0.02	-5.09e-03	-5.91e-04	-9.85e-04	2.34e-04
44	13	-0.09	0.04	-0.01	-5.83e-04	-1.07e-03	-2.34e-04
44	14	0.05	0.04	-5.22e-03	-5.90e-04	-9.87e-04	-2.57e-04
44	15	-0.08	-0.02	-0.01	-5.84e-04	-1.06e-03	2.57e-04
44	16	-0.04	0.09	-0.01	-6.23e-04	-1.02e-03	2.62e-04
44	17	7.21e-03	-0.07	-7.09e-03	-5.51e-04	-1.03e-03	-2.62e-04
44	18	2.54e-03	0.08	-0.01	-6.23e-04	-1.02e-03	-2.34e-04
44	19	-0.03	-0.06	-6.96e-03	-5.51e-04	-1.03e-03	2.34e-04
44	20	-0.01	9.26e-03	-9.51e-03	-5.87e-04	-1.03e-03	0.0
44	21	-0.01	9.26e-03	-9.51e-03	-5.87e-04	-1.03e-03	0.0
44	22	-0.01	9.26e-03	-9.51e-03	-5.87e-04	-1.03e-03	0.0
45	1	-2.54e-04	7.14e-04	0.04	-8.79e-04	-1.52e-03	-4.44e-06
45	2	-7.40e-05	-3.38e-05	-7.72e-03	5.10e-06	8.72e-06	0.0
45	3	-1.79e-04	4.72e-04	0.02	-5.85e-04	-1.01e-03	-2.91e-06
45	4	0.14	-0.01	0.02	-5.81e-04	-9.46e-04	4.90e-04
45	5	-0.14	0.01	0.02	-5.90e-04	-1.08e-03	-4.96e-04
45	6	0.14	1.71e-03	0.02	-5.83e-04	-9.48e-04	-5.45e-04
45	7	-0.14	-7.65e-04	0.02	-5.88e-04	-1.08e-03	5.39e-04
45	8	-7.70e-03	0.14	0.02	-6.51e-04	-1.02e-03	5.50e-04
45	9	7.35e-03	-0.14	0.02	-5.19e-04	-1.01e-03	-5.56e-04
45	10	-8.32e-03	0.14	0.02	-6.53e-04	-1.02e-03	-4.97e-04

45	11	7.96e-03	-0.14	0.02	-5.17e-04	-1.01e-03	4.91e-04
45	12	0.07	-4.59e-03	0.02	-5.83e-04	-9.81e-04	2.28e-04
45	13	-0.07	5.54e-03	0.02	-5.87e-04	-1.05e-03	-2.34e-04
45	14	0.07	1.06e-03	0.02	-5.84e-04	-9.82e-04	-2.57e-04
45	15	-0.07	-1.15e-04	0.02	-5.86e-04	-1.05e-03	2.52e-04
45	16	-3.71e-03	0.07	0.02	-6.17e-04	-1.01e-03	2.56e-04
45	17	3.36e-03	-0.07	0.02	-5.53e-04	-1.01e-03	-2.62e-04
45	18	-4.08e-03	0.07	0.02	-6.18e-04	-1.02e-03	-2.35e-04
45	19	3.73e-03	-0.07	0.02	-5.52e-04	-1.01e-03	2.29e-04
45	20	-1.79e-04	4.72e-04	0.02	-5.85e-04	-1.01e-03	-2.91e-06
45	21	-1.79e-04	4.72e-04	0.02	-5.85e-04	-1.01e-03	-2.91e-06
45	22	-1.79e-04	4.72e-04	0.02	-5.85e-04	-1.01e-03	-2.91e-06
46	1	1.34e-03	-3.01e-04	0.04	8.78e-04	1.52e-03	0.0
46	2	-7.72e-05	-1.85e-05	-7.72e-03	-5.19e-06	-9.25e-06	1.31e-06
46	3	8.84e-04	-2.03e-04	0.02	5.85e-04	1.01e-03	0.0
46	4	0.14	9.00e-03	0.02	5.80e-04	1.08e-03	4.96e-04
46	5	-0.14	-9.41e-03	0.02	5.90e-04	9.48e-04	-4.97e-04
46	6	0.14	-0.01	0.02	5.83e-04	1.08e-03	-5.44e-04
46	7	-0.14	9.91e-03	0.02	5.87e-04	9.48e-04	5.43e-04
46	8	-1.05e-03	0.14	0.02	5.23e-04	1.03e-03	5.55e-04
46	9	2.82e-03	-0.14	0.02	6.47e-04	9.97e-04	-5.56e-04
46	10	-8.23e-03	0.14	0.02	5.21e-04	1.03e-03	-4.97e-04
46	11	0.01	-0.14	0.02	6.49e-04	9.96e-04	4.96e-04
46	12	0.07	4.18e-03	0.02	5.82e-04	1.04e-03	2.32e-04
46	13	-0.07	-4.58e-03	0.02	5.87e-04	9.81e-04	-2.33e-04
46	14	0.07	-4.94e-03	0.02	5.84e-04	1.04e-03	-2.55e-04
46	15	-0.07	4.54e-03	0.02	5.86e-04	9.81e-04	2.55e-04
46	16	-2.84e-05	0.07	0.02	5.55e-04	1.02e-03	2.60e-04
46	17	1.80e-03	-0.07	0.02	6.15e-04	1.01e-03	-2.61e-04
46	18	-3.51e-03	0.07	0.02	5.54e-04	1.02e-03	-2.33e-04
46	19	5.28e-03	-0.07	0.02	6.16e-04	1.00e-03	2.32e-04
46	20	8.84e-04	-2.03e-04	0.02	5.85e-04	1.01e-03	0.0
46	21	8.84e-04	-2.03e-04	0.02	5.85e-04	1.01e-03	0.0
46	22	8.84e-04	-2.03e-04	0.02	5.85e-04	1.01e-03	0.0
47	1	6.78e-03	-2.77e-03	-0.03	2.06e-04	3.53e-04	-3.79e-06
47	2	-1.93e-04	-4.10e-05	-7.22e-03	1.71e-06	1.07e-06	0.0
47	3	4.49e-03	-1.85e-03	-0.02	1.37e-04	2.35e-04	-2.45e-06
47	4	0.15	-0.06	-0.01	1.33e-04	2.98e-04	5.00e-04
47	5	-0.14	0.06	-0.03	1.42e-04	1.73e-04	-5.05e-04
47	6	0.14	0.06	-0.01	1.42e-04	2.97e-04	-5.52e-04
47	7	-0.13	-0.06	-0.03	1.33e-04	1.74e-04	5.47e-04
47	8	-0.04	0.15	-0.02	7.16e-05	2.31e-04	5.60e-04
47	9	0.05	-0.16	-0.01	2.03e-04	2.40e-04	-5.65e-04
47	10	0.04	0.15	-0.02	6.94e-05	2.28e-04	-5.04e-04
47	11	-0.03	-0.15	-0.01	2.05e-04	2.43e-04	4.99e-04
47	12	0.08	-0.03	-0.02	1.35e-04	2.66e-04	2.33e-04
47	13	-0.07	0.03	-0.02	1.39e-04	2.05e-04	-2.38e-04
47	14	0.07	0.02	-0.02	1.39e-04	2.65e-04	-2.60e-04
47	15	-0.06	-0.03	-0.02	1.35e-04	2.06e-04	2.56e-04
47	16	-0.01	0.07	-0.02	1.06e-04	2.33e-04	2.62e-04
47	17	0.02	-0.08	-0.02	1.69e-04	2.38e-04	-2.67e-04
47	18	0.02	0.07	-0.02	1.04e-04	2.32e-04	-2.38e-04
47	19	-0.01	-0.07	-0.02	1.70e-04	2.39e-04	2.33e-04
47	20	4.49e-03	-1.85e-03	-0.02	1.37e-04	2.35e-04	-2.45e-06
47	21	4.49e-03	-1.85e-03	-0.02	1.37e-04	2.35e-04	-2.45e-06
47	22	4.49e-03	-1.85e-03	-0.02	1.37e-04	2.35e-04	-2.45e-06
48	1	-2.52e-03	2.35e-03	2.66e-03	-6.49e-05	-1.14e-04	-4.30e-06
48	2	-8.37e-05	-7.48e-05	-7.50e-03	0.0	0.0	0.0
48	3	-1.69e-03	1.56e-03	7.77e-04	-4.32e-05	-7.57e-05	-2.79e-06
48	4	0.14	-0.04	5.71e-03	-4.79e-05	0.0	4.94e-04
48	5	-0.15	0.04	-4.15e-03	-3.85e-05	-1.51e-04	-4.99e-04
48	6	0.14	0.03	5.55e-03	-4.52e-05	-1.90e-06	-5.48e-04
48	7	-0.14	-0.03	-4.00e-03	-4.12e-05	-1.49e-04	5.42e-04
48	8	-0.03	0.15	-1.90e-03	-1.12e-04	-7.01e-05	5.53e-04
48	9	0.03	-0.14	3.46e-03	2.59e-05	-8.13e-05	-5.59e-04
48	10	0.02	0.15	-2.06e-03	-1.14e-04	-7.06e-05	-5.00e-04
48	11	-0.02	-0.14	3.61e-03	2.80e-05	-8.08e-05	4.95e-04
48	12	0.07	-0.02	3.16e-03	-4.55e-05	-3.90e-05	2.30e-04
48	13	-0.07	0.02	-1.61e-03	-4.09e-05	-1.12e-04	-2.36e-04
48	14	0.06	0.02	3.09e-03	-4.42e-05	-3.99e-05	-2.59e-04
48	15	-0.07	-0.01	-1.54e-03	-4.23e-05	-1.11e-04	2.53e-04
48	16	-0.01	0.07	-5.19e-04	-7.68e-05	-7.30e-05	2.58e-04
48	17	0.01	-0.07	2.07e-03	-9.69e-06	-7.84e-05	-2.64e-04
48	18	7.64e-03	0.07	-5.90e-04	-7.77e-05	-7.32e-05	-2.36e-04
48	19	-0.01	-0.07	2.14e-03	-8.80e-06	-7.82e-05	2.30e-04
48	20	-1.69e-03	1.56e-03	7.77e-04	-4.32e-05	-7.57e-05	-2.79e-06
48	21	-1.69e-03	1.56e-03	7.77e-04	-4.32e-05	-7.57e-05	-2.79e-06

48	22	-1.69e-03	1.56e-03	7.77e-04	-4.32e-05	-7.57e-05	-2.79e-06
49	1	-0.05	0.03	-0.02	2.12e-06	-2.93e-06	1.84e-05
49	2	-8.08e-04	6.30e-04	-7.09e-03	0.0	-4.40e-06	1.46e-05
49	3	-0.03	0.02	-0.01	1.48e-06	-2.54e-06	1.42e-05
49	4	0.10	-0.05	-3.76e-03	6.64e-06	5.69e-05	5.16e-04
49	5	-0.16	0.09	-0.02	-3.67e-06	-6.20e-05	-4.87e-04
49	6	0.09	0.09	-4.03e-03	7.00e-06	5.63e-05	-5.37e-04
49	7	-0.16	-0.05	-0.02	-4.03e-06	-6.14e-05	5.66e-04
49	8	-0.08	0.16	-0.02	-6.31e-05	-1.10e-05	5.77e-04
49	9	0.01	-0.12	-7.78e-03	6.61e-05	5.92e-06	-5.49e-04
49	10	5.19e-03	0.15	-0.02	-6.58e-05	-1.29e-05	-4.88e-04
49	11	-0.07	-0.12	-7.48e-03	6.88e-05	7.81e-06	5.17e-04
49	12	0.03	-0.01	-8.45e-03	3.94e-06	2.62e-05	2.50e-04
49	13	-0.10	0.05	-0.02	0.0	-3.13e-05	-2.21e-04
49	14	0.03	0.05	-8.57e-03	4.03e-06	2.62e-05	-2.45e-04
49	15	-0.09	-0.01	-0.02	-1.06e-06	-3.12e-05	2.73e-04
49	16	-0.05	0.09	-0.02	-2.98e-05	-6.70e-06	2.79e-04
49	17	-9.89e-03	-0.05	-0.01	3.27e-05	1.61e-06	-2.50e-04
49	18	-0.01	0.08	-0.02	-3.11e-05	-7.40e-06	-2.21e-04
49	19	-0.05	-0.04	-0.01	3.41e-05	2.31e-06	2.50e-04
49	20	-0.03	0.02	-0.01	1.48e-06	-2.54e-06	1.42e-05
49	21	-0.03	0.02	-0.01	1.48e-06	-2.54e-06	1.42e-05
49	22	-0.03	0.02	-0.01	1.48e-06	-2.54e-06	1.42e-05
50	1	-6.37e-03	3.58e-03	-6.74e-03	1.91e-04	3.46e-04	1.31e-05
50	2	-8.09e-04	4.06e-04	-5.54e-03	1.36e-05	0.0	4.48e-06
50	3	-4.36e-03	2.44e-03	-5.23e-03	1.29e-04	2.31e-04	9.31e-06
50	4	0.10	0.06	-0.01	1.10e-04	4.11e-04	5.32e-04
50	5	-0.11	-0.05	1.29e-03	1.48e-04	5.04e-05	-5.13e-04
50	6	0.11	-0.06	-0.01	1.12e-04	4.03e-04	-5.59e-04
50	7	-0.11	0.07	1.15e-03	1.46e-04	5.92e-05	5.78e-04
50	8	0.03	0.12	-2.74e-03	9.79e-05	9.07e-05	5.91e-04
50	9	-0.04	-0.12	-7.72e-03	1.60e-04	3.71e-04	-5.73e-04
50	10	-0.04	0.13	-2.57e-03	1.01e-04	8.23e-05	-5.24e-04
50	11	0.03	-0.12	-7.89e-03	1.57e-04	3.79e-04	5.43e-04
50	12	0.05	0.03	-8.39e-03	1.20e-04	3.19e-04	2.56e-04
50	13	-0.05	-0.02	-2.07e-03	1.38e-04	1.43e-04	-2.37e-04
50	14	0.05	-0.03	-8.34e-03	1.21e-04	3.14e-04	-2.56e-04
50	15	-0.06	0.03	-2.12e-03	1.37e-04	1.48e-04	2.75e-04
50	16	0.01	0.06	-4.02e-03	1.14e-04	1.64e-04	2.80e-04
50	17	-0.02	-0.05	-6.44e-03	1.44e-04	2.98e-04	-2.62e-04
50	18	-0.02	0.06	-3.96e-03	1.16e-04	1.59e-04	-2.43e-04
50	19	0.01	-0.06	-6.50e-03	1.42e-04	3.03e-04	2.62e-04
50	20	-4.36e-03	2.44e-03	-5.23e-03	1.29e-04	2.31e-04	9.31e-06
50	21	-4.36e-03	2.44e-03	-5.23e-03	1.29e-04	2.31e-04	9.31e-06
50	22	-4.36e-03	2.44e-03	-5.23e-03	1.29e-04	2.31e-04	9.31e-06
51	1	0.02	-0.01	-0.02	-8.91e-04	-1.54e-03	1.16e-05
51	2	7.91e-04	-3.18e-04	-6.51e-03	-1.53e-06	-2.54e-06	2.44e-05
51	3	0.02	-9.12e-03	-0.02	-5.94e-04	-1.03e-03	1.10e-05
51	4	0.13	0.06	-0.02	-6.05e-04	-9.50e-04	5.07e-04
51	5	-0.09	-0.07	-6.99e-03	-5.83e-04	-1.11e-03	-4.86e-04
51	6	0.13	-0.08	-0.02	-5.80e-04	-9.53e-04	-5.36e-04
51	7	-0.10	0.07	-7.25e-03	-6.09e-04	-1.11e-03	5.58e-04
51	8	0.05	0.12	-0.01	-6.88e-04	-1.04e-03	5.69e-04
51	9	-0.02	-0.13	-0.02	-5.01e-04	-1.02e-03	-5.47e-04
51	10	-0.02	0.12	-0.01	-6.92e-04	-1.04e-03	-4.86e-04
51	11	0.05	-0.14	-0.02	-4.97e-04	-1.02e-03	5.08e-04
51	12	0.07	0.02	-0.02	-5.99e-04	-9.91e-04	2.43e-04
51	13	-0.04	-0.04	-0.01	-5.89e-04	-1.07e-03	-2.21e-04
51	14	0.07	-0.04	-0.02	-5.88e-04	-9.93e-04	-2.46e-04
51	15	-0.04	0.03	-0.01	-6.01e-04	-1.07e-03	2.68e-04
51	16	0.03	0.05	-0.01	-6.39e-04	-1.04e-03	2.73e-04
51	17	-1.99e-03	-0.07	-0.02	-5.49e-04	-1.02e-03	-2.52e-04
51	18	-2.38e-03	0.06	-0.01	-6.42e-04	-1.04e-03	-2.22e-04
51	19	0.03	-0.07	-0.02	-5.47e-04	-1.02e-03	2.43e-04
51	20	0.02	-9.12e-03	-0.02	-5.94e-04	-1.03e-03	1.10e-05
51	21	0.02	-9.12e-03	-0.02	-5.94e-04	-1.03e-03	1.10e-05
51	22	0.02	-9.12e-03	-0.02	-5.94e-04	-1.03e-03	1.10e-05
52	1	6.95e-03	-2.88e-03	-7.95e-03	-2.10e-04	-3.49e-04	-2.35e-06
52	2	9.33e-06	-2.05e-04	-6.71e-03	0.0	4.14e-06	4.35e-06
52	3	4.63e-03	-1.95e-03	-6.20e-03	-1.40e-04	-2.32e-04	0.0
52	4	0.12	-0.06	1.23e-03	-9.05e-05	-1.64e-04	5.12e-04
52	5	-0.11	0.06	-0.01	-1.90e-04	-3.00e-04	-5.14e-04
52	6	0.11	0.06	1.02e-03	-9.31e-05	-1.65e-04	-5.54e-04
52	7	-0.10	-0.06	-0.01	-1.87e-04	-3.00e-04	5.52e-04
52	8	-0.04	0.12	-0.01	-1.79e-04	-2.44e-04	5.71e-04
52	9	0.04	-0.13	-1.59e-03	-1.01e-04	-2.21e-04	-5.73e-04
52	10	0.04	0.11	-0.01	-1.82e-04	-2.46e-04	-5.06e-04

52	11	-0.03	-0.12	-1.33e-03	-9.82e-05	-2.19e-04	5.04e-04
52	12	0.06	-0.03	-2.60e-03	-1.16e-04	-1.99e-04	2.41e-04
52	13	-0.05	0.03	-9.79e-03	-1.64e-04	-2.65e-04	-2.43e-04
52	14	0.05	0.03	-2.69e-03	-1.18e-04	-2.00e-04	-2.60e-04
52	15	-0.05	-0.03	-9.70e-03	-1.63e-04	-2.65e-04	2.58e-04
52	16	-0.01	0.06	-8.43e-03	-1.59e-04	-2.38e-04	2.68e-04
52	17	0.02	-0.06	-3.97e-03	-1.21e-04	-2.27e-04	-2.70e-04
52	18	0.02	0.05	-8.54e-03	-1.60e-04	-2.39e-04	-2.37e-04
52	19	-0.01	-0.06	-3.85e-03	-1.20e-04	-2.26e-04	2.35e-04
52	20	4.63e-03	-1.95e-03	-6.20e-03	-1.40e-04	-2.32e-04	0.0
52	21	4.63e-03	-1.95e-03	-6.20e-03	-1.40e-04	-2.32e-04	0.0
52	22	4.63e-03	-1.95e-03	-6.20e-03	-1.40e-04	-2.32e-04	0.0
53	1	-2.56e-03	2.43e-03	-0.04	6.77e-05	1.09e-04	-2.11e-06
53	2	-1.37e-04	-7.35e-06	-7.31e-03	4.15e-06	-7.07e-06	-1.83e-06
53	3	-1.72e-03	1.62e-03	-0.03	4.57e-05	7.20e-05	-1.65e-06
53	4	0.11	-0.03	-0.02	-2.75e-06	1.05e-04	4.85e-04
53	5	-0.11	0.04	-0.03	9.42e-05	3.85e-05	-4.89e-04
53	6	0.10	0.04	-0.02	-1.05e-06	1.05e-04	-5.40e-04
53	7	-0.10	-0.03	-0.03	9.25e-05	3.88e-05	5.37e-04
53	8	-0.03	0.11	-0.03	-4.21e-05	6.61e-05	5.45e-04
53	9	0.02	-0.11	-0.02	1.34e-04	7.79e-05	-5.48e-04
53	10	0.02	0.11	-0.03	-4.35e-05	6.51e-05	-4.94e-04
53	11	-0.02	-0.11	-0.02	1.35e-04	7.88e-05	4.90e-04
53	12	0.05	-0.02	-0.02	2.20e-05	8.81e-05	2.26e-04
53	13	-0.05	0.02	-0.03	6.94e-05	5.58e-05	-2.30e-04
53	14	0.05	0.02	-0.02	2.31e-05	8.82e-05	-2.55e-04
53	15	-0.05	-0.01	-0.03	6.84e-05	5.58e-05	2.52e-04
53	16	-0.01	0.06	-0.03	2.95e-06	6.91e-05	2.54e-04
53	17	0.01	-0.05	-0.03	8.85e-05	7.49e-05	-2.57e-04
53	18	7.52e-03	0.05	-0.03	2.60e-06	6.88e-05	-2.33e-04
53	19	-0.01	-0.05	-0.03	8.88e-05	7.52e-05	2.30e-04
53	20	-1.72e-03	1.62e-03	-0.03	4.57e-05	7.20e-05	-1.65e-06
53	21	-1.72e-03	1.62e-03	-0.03	4.57e-05	7.20e-05	-1.65e-06
53	22	-1.72e-03	1.62e-03	-0.03	4.57e-05	7.20e-05	-1.65e-06
54	1	-3.49e-04	8.35e-06	-0.07	-4.76e-04	1.77e-03	-3.90e-06
54	2	-7.66e-05	-3.21e-05	-7.33e-03	-2.42e-06	9.01e-06	0.0
54	3	-2.43e-04	1.29e-06	-0.05	-3.17e-04	1.18e-03	-2.52e-06
54	4	0.10	-8.44e-03	-0.05	-4.26e-04	1.68e-03	4.85e-04
54	5	-0.10	8.44e-03	-0.05	-2.09e-04	6.91e-04	-4.90e-04
54	6	0.10	1.35e-03	-0.05	-4.26e-04	1.67e-03	-5.37e-04
54	7	-0.10	-1.34e-03	-0.05	-2.09e-04	7.00e-04	5.32e-04
54	8	-2.40e-03	0.10	-0.05	-4.32e-04	1.28e-03	5.43e-04
54	9	1.91e-03	-0.10	-0.05	-2.03e-04	1.09e-03	-5.48e-04
54	10	-6.54e-03	0.10	-0.05	-4.36e-04	1.28e-03	-4.92e-04
54	11	6.05e-03	-0.10	-0.05	-1.98e-04	1.09e-03	4.87e-04
54	12	0.05	-4.05e-03	-0.05	-3.70e-04	1.42e-03	2.26e-04
54	13	-0.05	4.05e-03	-0.05	-2.65e-04	9.45e-04	-2.31e-04
54	14	0.05	6.50e-04	-0.05	-3.70e-04	1.42e-03	-2.53e-04
54	15	-0.05	-6.47e-04	-0.05	-2.64e-04	9.49e-04	2.48e-04
54	16	-1.25e-03	0.05	-0.05	-3.73e-04	1.23e-03	2.53e-04
54	17	7.66e-04	-0.05	-0.05	-2.62e-04	1.14e-03	-2.58e-04
54	18	-3.28e-03	0.05	-0.05	-3.75e-04	1.23e-03	-2.32e-04
54	19	2.79e-03	-0.05	-0.05	-2.60e-04	1.14e-03	2.27e-04
54	20	-2.43e-04	1.29e-06	-0.05	-3.17e-04	1.18e-03	-2.52e-06
54	21	-2.43e-04	1.29e-06	-0.05	-3.17e-04	1.18e-03	-2.52e-06
54	22	-2.43e-04	1.29e-06	-0.05	-3.17e-04	1.18e-03	-2.52e-06
55	1	1.51e-03	4.21e-04	-0.07	4.62e-04	-1.72e-03	-3.90e-06
55	2	-7.08e-05	-1.86e-05	-7.33e-03	2.93e-06	-1.09e-05	0.0
55	3	9.94e-04	2.78e-04	-0.05	3.08e-04	-1.15e-03	-2.53e-06
55	4	0.10	7.86e-03	-0.05	3.45e-04	-1.06e-03	4.82e-04
55	5	-0.10	-7.31e-03	-0.05	2.72e-04	-1.24e-03	-4.87e-04
55	6	0.10	-9.17e-03	-0.05	3.40e-04	-1.06e-03	-5.34e-04
55	7	-0.10	9.73e-03	-0.05	2.77e-04	-1.24e-03	5.29e-04
55	8	-4.04e-03	0.10	-0.05	9.95e-05	-1.19e-03	5.39e-04
55	9	6.03e-03	-0.10	-0.05	5.17e-04	-1.12e-03	-5.44e-04
55	10	-4.87e-03	0.10	-0.05	9.24e-05	-1.19e-03	-4.91e-04
55	11	6.86e-03	-0.10	-0.05	5.24e-04	-1.11e-03	4.85e-04
55	12	0.05	3.86e-03	-0.05	3.26e-04	-1.11e-03	2.25e-04
55	13	-0.05	-3.30e-03	-0.05	2.91e-04	-1.19e-03	-2.30e-04
55	14	0.05	-4.15e-03	-0.05	3.23e-04	-1.11e-03	-2.52e-04
55	15	-0.05	4.70e-03	-0.05	2.93e-04	-1.19e-03	2.47e-04
55	16	-1.37e-03	0.05	-0.05	2.07e-04	-1.17e-03	2.51e-04
55	17	3.35e-03	-0.05	-0.05	4.09e-04	-1.13e-03	-2.56e-04
55	18	-1.82e-03	0.05	-0.05	2.04e-04	-1.17e-03	-2.32e-04
55	19	3.81e-03	-0.05	-0.05	4.13e-04	-1.13e-03	2.27e-04
55	20	9.94e-04	2.78e-04	-0.05	3.08e-04	-1.15e-03	-2.53e-06
55	21	9.94e-04	2.78e-04	-0.05	3.08e-04	-1.15e-03	-2.53e-06

55	22	9.94e-04	2.78e-04	-0.05	3.08e-04	-1.15e-03	-2.53e-06
56	1	0.02	-0.01	-0.01	9.09e-04	1.55e-03	-1.28e-05
56	2	-9.62e-05	1.10e-04	-7.33e-03	1.97e-05	2.20e-05	-4.07e-06
56	3	0.02	-8.81e-03	-9.69e-03	6.08e-04	1.04e-03	-9.05e-06
56	4	0.15	0.06	-0.02	6.24e-04	1.13e-03	4.89e-04
56	5	-0.12	-0.07	-4.96e-04	5.93e-04	9.52e-04	-5.07e-04
56	6	0.16	-0.09	-0.02	6.25e-04	1.12e-03	-5.55e-04
56	7	-0.13	0.07	-7.50e-04	5.92e-04	9.55e-04	5.37e-04
56	8	0.05	0.14	-4.57e-03	5.07e-04	1.01e-03	5.49e-04
56	9	-0.02	-0.16	-0.01	7.10e-04	1.07e-03	-5.67e-04
56	10	-0.02	0.15	-4.24e-03	5.01e-04	1.00e-03	-5.07e-04
56	11	0.05	-0.17	-0.02	7.16e-04	1.07e-03	4.89e-04
56	12	0.08	0.02	-0.01	6.16e-04	1.08e-03	2.25e-04
56	13	-0.05	-0.04	-5.23e-03	6.01e-04	9.97e-04	-2.43e-04
56	14	0.09	-0.04	-0.01	6.16e-04	1.08e-03	-2.65e-04
56	15	-0.06	0.03	-5.35e-03	6.01e-04	9.98e-04	2.47e-04
56	16	0.03	0.06	-7.21e-03	5.60e-04	1.02e-03	2.53e-04
56	17	-2.41e-03	-0.08	-0.01	6.57e-04	1.05e-03	-2.71e-04
56	18	-3.68e-03	0.07	-7.06e-03	5.56e-04	1.02e-03	-2.42e-04
56	19	0.03	-0.09	-0.01	6.61e-04	1.06e-03	2.24e-04
56	20	0.02	-8.81e-03	-9.69e-03	6.08e-04	1.04e-03	-9.05e-06
56	21	0.02	-8.81e-03	-9.69e-03	6.08e-04	1.04e-03	-9.05e-06
56	22	0.02	-8.81e-03	-9.69e-03	6.08e-04	1.04e-03	-9.05e-06
57	1	3.78e-03	-1.92e-03	-0.04	-4.27e-05	-9.63e-05	-1.10e-05
57	2	2.75e-05	2.37e-05	-7.65e-03	1.35e-05	9.63e-06	8.86e-06
57	3	2.53e-03	-1.28e-03	-0.03	-2.67e-05	-6.29e-05	-6.15e-06
57	4	0.11	0.03	-0.03	-1.27e-04	-1.26e-04	4.80e-04
57	5	-0.10	-0.04	-0.02	7.35e-05	0.0	-4.92e-04
57	6	0.11	-0.04	-0.03	-1.22e-04	-1.21e-04	-5.33e-04
57	7	-0.10	0.04	-0.02	6.90e-05	-4.57e-06	5.21e-04
57	8	0.02	0.11	-0.02	1.91e-05	9.09e-05	5.35e-04
57	9	-0.02	-0.11	-0.03	-7.24e-05	-2.17e-04	-5.48e-04
57	10	-0.02	0.11	-0.02	2.22e-05	9.84e-05	-4.87e-04
57	11	0.02	-0.11	-0.03	-7.55e-05	-2.24e-04	4.75e-04
57	12	0.05	0.01	-0.03	-7.54e-05	-9.35e-05	2.23e-04
57	13	-0.05	-0.02	-0.02	2.21e-05	-3.24e-05	-2.35e-04
57	14	0.05	-0.02	-0.03	-7.28e-05	-9.07e-05	-2.53e-04
57	15	-0.05	0.02	-0.02	1.94e-05	-3.52e-05	2.40e-04
57	16	0.01	0.05	-0.03	-4.89e-06	1.11e-05	2.48e-04
57	17	-6.25e-03	-0.05	-0.03	-4.84e-05	-1.37e-04	-2.60e-04
57	18	-7.75e-03	0.05	-0.03	-2.93e-06	1.54e-05	-2.31e-04
57	19	0.01	-0.06	-0.03	-5.04e-05	-1.41e-04	2.19e-04
57	20	2.53e-03	-1.28e-03	-0.03	-2.67e-05	-6.29e-05	-6.15e-06
57	21	2.53e-03	-1.28e-03	-0.03	-2.67e-05	-6.29e-05	-6.15e-06
57	22	2.53e-03	-1.28e-03	-0.03	-2.67e-05	-6.29e-05	-6.15e-06
58	1	-5.70e-03	3.21e-03	-0.03	-2.05e-04	-3.61e-04	-5.08e-06
58	2	3.73e-05	1.55e-06	-7.24e-03	-1.51e-06	-4.98e-06	0.0
58	3	-3.80e-03	2.14e-03	-0.02	-1.37e-04	-2.42e-04	-3.32e-06
58	4	0.14	0.06	-0.03	-1.47e-04	-1.85e-04	4.98e-04
58	5	-0.14	-0.05	-0.01	-1.27e-04	-2.98e-04	-5.05e-04
58	6	0.14	-0.07	-0.03	-1.45e-04	-1.84e-04	-5.53e-04
58	7	-0.15	0.07	-0.01	-1.29e-04	-2.99e-04	5.46e-04
58	8	0.03	0.15	-0.01	-1.87e-04	-2.16e-04	5.58e-04
58	9	-0.04	-0.15	-0.02	-8.73e-05	-2.67e-04	-5.64e-04
58	10	-0.04	0.16	-0.01	-1.87e-04	-2.14e-04	-5.05e-04
58	11	0.03	-0.16	-0.02	-8.68e-05	-2.69e-04	4.99e-04
58	12	0.06	0.03	-0.02	-1.42e-04	-2.14e-04	2.32e-04
58	13	-0.07	-0.02	-0.02	-1.32e-04	-2.69e-04	-2.39e-04
58	14	0.07	-0.03	-0.02	-1.41e-04	-2.13e-04	-2.61e-04
58	15	-0.07	0.03	-0.02	-1.34e-04	-2.70e-04	2.55e-04
58	16	0.01	0.07	-0.02	-1.61e-04	-2.29e-04	2.60e-04
58	17	-0.02	-0.07	-0.02	-1.13e-04	-2.54e-04	-2.67e-04
58	18	-0.02	0.08	-0.02	-1.61e-04	-2.28e-04	-2.39e-04
58	19	0.01	-0.08	-0.02	-1.13e-04	-2.55e-04	2.32e-04
58	20	-3.80e-03	2.14e-03	-0.02	-1.37e-04	-2.42e-04	-3.32e-06
58	21	-3.80e-03	2.14e-03	-0.02	-1.37e-04	-2.42e-04	-3.32e-06
58	22	-3.80e-03	2.14e-03	-0.02	-1.37e-04	-2.42e-04	-3.32e-06
59	1	3.61e-03	-1.94e-03	2.65e-03	6.52e-05	1.10e-04	-3.08e-06
59	2	-6.86e-05	2.37e-05	-7.51e-03	0.0	-1.17e-06	0.0
59	3	2.40e-03	-1.29e-03	7.67e-04	4.35e-05	7.29e-05	-1.94e-06
59	4	0.14	0.03	-4.18e-03	4.95e-05	1.55e-04	4.95e-04
59	5	-0.14	-0.04	5.71e-03	3.74e-05	-9.06e-06	-4.99e-04
59	6	0.14	-0.04	-4.03e-03	4.98e-05	1.52e-04	-5.47e-04
59	7	-0.14	0.04	5.57e-03	3.72e-05	-5.93e-06	5.43e-04
59	8	0.02	0.14	3.58e-03	-3.50e-05	5.08e-05	5.55e-04
59	9	-0.02	-0.14	-2.05e-03	1.22e-04	9.51e-05	-5.59e-04
59	10	-0.02	0.15	3.76e-03	-3.83e-05	4.91e-05	-4.99e-04

59	11	0.03	-0.15	-2.23e-03	1.25e-04	9.68e-05	4.95e-04
59	12	0.07	0.01	-1.63e-03	4.64e-05	1.13e-04	2.31e-04
59	13	-0.07	-0.02	3.16e-03	4.06e-05	3.31e-05	-2.35e-04
59	14	0.07	-0.02	-1.56e-03	4.64e-05	1.11e-04	-2.58e-04
59	15	-0.07	0.02	3.10e-03	4.06e-05	3.48e-05	2.54e-04
59	16	0.01	0.07	2.13e-03	5.50e-06	6.25e-05	2.60e-04
59	17	-5.88e-03	-0.07	-5.94e-04	8.14e-05	8.34e-05	-2.64e-04
59	18	-8.54e-03	0.07	2.21e-03	3.84e-06	6.14e-05	-2.35e-04
59	19	0.01	-0.07	-6.77e-04	8.31e-05	8.45e-05	2.31e-04
59	20	2.40e-03	-1.29e-03	7.67e-04	4.35e-05	7.29e-05	-1.94e-06
59	21	2.40e-03	-1.29e-03	7.67e-04	4.35e-05	7.29e-05	-1.94e-06
59	22	2.40e-03	-1.29e-03	7.67e-04	4.35e-05	7.29e-05	-1.94e-06
60	1	0.05	-0.03	-0.02	2.63e-05	1.57e-05	-3.58e-05
60	2	-5.89e-04	7.19e-04	-7.10e-03	2.09e-05	2.05e-05	-1.81e-05
60	3	0.03	-0.02	-0.01	2.03e-05	1.32e-05	-2.63e-05
60	4	0.15	0.05	-0.02	5.70e-06	7.06e-05	4.72e-04
60	5	-0.09	-0.08	-3.78e-03	3.49e-05	-4.43e-05	-5.25e-04
60	6	0.16	-0.09	-0.02	7.75e-06	7.08e-05	-5.68e-04
60	7	-0.10	0.06	-4.05e-03	3.29e-05	-4.44e-05	5.15e-04
60	8	0.07	0.12	-7.88e-03	-2.10e-05	4.04e-05	5.29e-04
60	9	-7.30e-03	-0.15	-0.02	6.16e-05	-1.41e-05	-5.81e-04
60	10	-9.11e-03	0.13	-7.58e-03	-1.99e-05	4.20e-05	-5.23e-04
60	11	0.07	-0.16	-0.02	6.05e-05	-1.57e-05	4.70e-04
60	12	0.09	0.01	-0.02	1.32e-05	4.09e-05	2.08e-04
60	13	-0.03	-0.05	-8.47e-03	2.74e-05	-1.46e-05	-2.61e-04
60	14	0.09	-0.05	-0.02	1.45e-05	4.13e-05	-2.80e-04
60	15	-0.03	0.02	-8.59e-03	2.61e-05	-1.50e-05	2.27e-04
60	16	0.05	0.05	-0.01	0.0	2.63e-05	2.34e-04
60	17	0.01	-0.08	-0.02	4.06e-05	0.0	-2.86e-04
60	18	0.01	0.05	-0.01	1.11e-06	2.73e-05	-2.59e-04
60	19	0.05	-0.09	-0.02	3.95e-05	0.0	2.07e-04
60	20	0.03	-0.02	-0.01	2.03e-05	1.32e-05	-2.63e-05
60	21	0.03	-0.02	-0.01	2.03e-05	1.32e-05	-2.63e-05
60	22	0.03	-0.02	-0.01	2.03e-05	1.32e-05	-2.63e-05
61	1	1.20e-03	-4.79e-04	-0.07	-1.30e-03	-1.30e-03	-3.84e-06
61	2	-7.58e-05	-2.20e-05	-7.33e-03	-6.64e-06	-6.64e-06	0.0
61	3	7.90e-04	-3.22e-04	-0.05	-8.67e-04	-8.67e-04	-2.49e-06
61	4	0.10	-7.31e-03	-0.05	-6.44e-04	-5.49e-04	4.86e-04
61	5	-0.10	6.67e-03	-0.05	-1.09e-03	-1.19e-03	-4.91e-04
61	6	0.10	-8.36e-03	-0.05	-6.53e-04	-5.60e-04	-5.36e-04
61	7	-0.10	7.71e-03	-0.05	-1.08e-03	-1.17e-03	5.31e-04
61	8	3.95e-04	0.10	-0.05	-1.16e-03	-1.07e-03	5.44e-04
61	9	1.18e-03	-0.10	-0.05	-5.73e-04	-6.63e-04	-5.49e-04
61	10	-6.63e-03	0.10	-0.05	-1.17e-03	-1.08e-03	-4.89e-04
61	11	8.21e-03	-0.10	-0.05	-5.62e-04	-6.52e-04	4.84e-04
61	12	0.05	-3.64e-03	-0.05	-7.59e-04	-7.13e-04	2.27e-04
61	13	-0.05	3.00e-03	-0.05	-9.75e-04	-1.02e-03	-2.32e-04
61	14	0.05	-4.08e-03	-0.05	-7.63e-04	-7.18e-04	-2.53e-04
61	15	-0.05	3.43e-03	-0.05	-9.71e-04	-1.02e-03	2.48e-04
61	16	5.99e-04	0.05	-0.05	-1.01e-03	-9.65e-04	2.55e-04
61	17	9.81e-04	-0.05	-0.05	-7.24e-04	-7.68e-04	-2.59e-04
61	18	-2.77e-03	0.05	-0.05	-1.01e-03	-9.71e-04	-2.30e-04
61	19	4.35e-03	-0.05	-0.05	-7.20e-04	-7.63e-04	2.25e-04
61	20	7.90e-04	-3.22e-04	-0.05	-8.67e-04	-8.67e-04	-2.49e-06
61	21	7.90e-04	-3.22e-04	-0.05	-8.67e-04	-8.67e-04	-2.49e-06
61	22	7.90e-04	-3.22e-04	-0.05	-8.67e-04	-8.67e-04	-2.49e-06
62	1	-8.43e-05	9.20e-04	-0.07	1.26e-03	1.26e-03	-3.90e-06
62	2	-9.04e-05	-2.37e-05	-7.33e-03	7.99e-06	8.01e-06	0.0
62	3	-6.83e-05	6.10e-04	-0.05	8.42e-04	8.42e-04	-2.53e-06
62	4	0.10	-7.06e-03	-0.05	7.65e-04	1.00e-03	4.88e-04
62	5	-0.10	8.28e-03	-0.05	9.20e-04	6.85e-04	-4.93e-04
62	6	0.10	-2.08e-04	-0.05	7.67e-04	9.96e-04	-5.34e-04
62	7	-0.10	1.43e-03	-0.05	9.18e-04	6.88e-04	5.29e-04
62	8	-7.60e-03	0.10	-0.05	6.94e-04	9.14e-04	5.45e-04
62	9	7.46e-03	-0.10	-0.05	9.90e-04	7.71e-04	-5.50e-04
62	10	-6.44e-03	0.10	-0.05	6.91e-04	9.13e-04	-4.87e-04
62	11	6.30e-03	-0.10	-0.05	9.94e-04	7.71e-04	4.82e-04
62	12	0.05	-3.08e-03	-0.05	8.05e-04	9.19e-04	2.28e-04
62	13	-0.05	4.30e-03	-0.05	8.80e-04	7.66e-04	-2.33e-04
62	14	0.05	2.21e-04	-0.05	8.06e-04	9.17e-04	-2.51e-04
62	15	-0.05	9.99e-04	-0.05	8.79e-04	7.68e-04	2.46e-04
62	16	-3.60e-03	0.05	-0.05	7.70e-04	8.77e-04	2.55e-04
62	17	3.46e-03	-0.05	-0.05	9.14e-04	8.07e-04	-2.60e-04
62	18	-3.10e-03	0.05	-0.05	7.69e-04	8.77e-04	-2.29e-04
62	19	2.96e-03	-0.05	-0.05	9.15e-04	8.08e-04	2.24e-04
62	20	-6.83e-05	6.10e-04	-0.05	8.42e-04	8.42e-04	-2.53e-06
62	21	-6.83e-05	6.10e-04	-0.05	8.42e-04	8.42e-04	-2.53e-06

62	22	-6.83e-05	6.10e-04	-0.05	8.42e-04	8.42e-04	-2.53e-06
63	1	-0.02	0.02	-0.02	1.24e-03	1.24e-03	-4.09e-06
63	2	-3.49e-04	1.20e-04	-7.04e-03	-8.82e-06	-8.82e-06	0.0
63	3	-0.01	0.01	-0.02	8.26e-04	8.26e-04	-2.65e-06
63	4	0.11	-0.04	-8.83e-03	8.42e-04	8.89e-04	4.96e-04
63	5	-0.14	0.07	-0.02	8.11e-04	7.64e-04	-5.01e-04
63	6	0.10	0.07	-9.07e-03	8.42e-04	8.89e-04	-5.49e-04
63	7	-0.13	-0.04	-0.02	8.11e-04	7.63e-04	5.44e-04
63	8	-0.07	0.14	-0.02	7.65e-04	8.13e-04	5.56e-04
63	9	0.05	-0.11	-9.12e-03	8.87e-04	8.39e-04	-5.61e-04
63	10	0.04	0.13	-0.02	7.61e-04	8.10e-04	-5.01e-04
63	11	-0.06	-0.10	-8.75e-03	8.91e-04	8.42e-04	4.96e-04
63	12	0.05	-0.01	-0.01	8.34e-04	8.56e-04	2.31e-04
63	13	-0.07	0.04	-0.02	8.19e-04	7.96e-04	-2.37e-04
63	14	0.04	0.04	-0.01	8.33e-04	8.57e-04	-2.59e-04
63	15	-0.07	-0.01	-0.02	8.19e-04	7.95e-04	2.54e-04
63	16	-0.04	0.07	-0.02	7.96e-04	8.20e-04	2.59e-04
63	17	0.02	-0.05	-0.01	8.56e-04	8.33e-04	-2.65e-04
63	18	0.01	0.07	-0.02	7.94e-04	8.18e-04	-2.36e-04
63	19	-0.04	-0.04	-0.01	8.58e-04	8.34e-04	2.31e-04
63	20	-0.01	0.01	-0.02	8.26e-04	8.26e-04	-2.65e-06
63	21	-0.01	0.01	-0.02	8.26e-04	8.26e-04	-2.65e-06
63	22	-0.01	0.01	-0.02	8.26e-04	8.26e-04	-2.65e-06
64	1	-0.02	0.02	-0.01	-1.25e-03	-1.25e-03	-4.07e-06
64	2	-2.68e-04	4.30e-05	-7.15e-03	0.0	0.0	0.0
64	3	-0.01	0.01	-9.47e-03	-8.33e-04	-8.33e-04	-2.63e-06
64	4	0.14	-0.04	-2.03e-03	-8.24e-04	-7.71e-04	4.98e-04
64	5	-0.16	0.07	-0.02	-8.41e-04	-8.95e-04	-5.03e-04
64	6	0.13	0.07	-2.32e-03	-8.25e-04	-7.72e-04	-5.51e-04
64	7	-0.15	-0.04	-0.02	-8.40e-04	-8.93e-04	5.46e-04
64	8	-0.08	0.16	-0.02	-8.94e-04	-8.39e-04	5.58e-04
64	9	0.05	-0.14	-2.31e-03	-7.72e-04	-8.26e-04	-5.63e-04
64	10	0.04	0.16	-0.02	-8.95e-04	-8.40e-04	-5.03e-04
64	11	-0.06	-0.13	-2.00e-03	-7.70e-04	-8.25e-04	4.98e-04
64	12	0.06	-0.01	-5.87e-03	-8.28e-04	-8.03e-04	2.32e-04
64	13	-0.09	0.04	-0.01	-8.37e-04	-8.63e-04	-2.37e-04
64	14	0.06	0.04	-6.00e-03	-8.29e-04	-8.03e-04	-2.60e-04
64	15	-0.08	-0.01	-0.01	-8.36e-04	-8.62e-04	2.55e-04
64	16	-0.04	0.09	-0.01	-8.62e-04	-8.36e-04	2.60e-04
64	17	0.02	-0.06	-6.00e-03	-8.03e-04	-8.29e-04	-2.66e-04
64	18	0.01	0.08	-0.01	-8.63e-04	-8.36e-04	-2.37e-04
64	19	-0.04	-0.06	-5.86e-03	-8.02e-04	-8.29e-04	2.32e-04
64	20	-0.01	0.01	-9.47e-03	-8.33e-04	-8.33e-04	-2.63e-06
64	21	-0.01	0.01	-9.47e-03	-8.33e-04	-8.33e-04	-2.63e-06
64	22	-0.01	0.01	-9.47e-03	-8.33e-04	-8.33e-04	-2.63e-06
65	1	-9.51e-05	9.03e-04	0.04	-1.24e-03	-1.24e-03	-3.90e-06
65	2	-7.60e-05	-3.39e-05	-7.72e-03	7.19e-06	7.19e-06	0.0
65	3	-7.36e-05	5.98e-04	0.02	-8.28e-04	-8.28e-04	-2.53e-06
65	4	0.14	-9.49e-03	0.02	-8.23e-04	-7.58e-04	4.93e-04
65	5	-0.14	0.01	0.02	-8.32e-04	-8.97e-04	-4.98e-04
65	6	0.14	-1.22e-03	0.02	-8.24e-04	-7.60e-04	-5.46e-04
65	7	-0.14	2.41e-03	0.02	-8.31e-04	-8.95e-04	5.41e-04
65	8	-8.76e-03	0.14	0.02	-8.93e-04	-8.31e-04	5.53e-04
65	9	8.61e-03	-0.14	0.02	-7.62e-04	-8.25e-04	-5.58e-04
65	10	-8.38e-03	0.14	0.02	-8.96e-04	-8.33e-04	-4.98e-04
65	11	8.23e-03	-0.14	0.02	-7.60e-04	-8.22e-04	4.93e-04
65	12	0.07	-4.27e-03	0.02	-8.25e-04	-7.94e-04	2.30e-04
65	13	-0.07	5.46e-03	0.02	-8.30e-04	-8.61e-04	-2.35e-04
65	14	0.07	-2.54e-04	0.02	-8.26e-04	-7.95e-04	-2.58e-04
65	15	-0.07	1.45e-03	0.02	-8.29e-04	-8.60e-04	2.53e-04
65	16	-4.15e-03	0.07	0.02	-8.59e-04	-8.29e-04	2.58e-04
65	17	4.00e-03	-0.07	0.02	-7.96e-04	-8.26e-04	-2.63e-04
65	18	-4.04e-03	0.07	0.02	-8.60e-04	-8.30e-04	-2.35e-04
65	19	3.90e-03	-0.07	0.02	-7.95e-04	-8.25e-04	2.30e-04
65	20	-7.36e-05	5.98e-04	0.02	-8.28e-04	-8.28e-04	-2.53e-06
65	21	-7.36e-05	5.98e-04	0.02	-8.28e-04	-8.28e-04	-2.53e-06
65	22	-7.36e-05	5.98e-04	0.02	-8.28e-04	-8.28e-04	-2.53e-06
66	1	1.18e-03	-4.90e-04	0.04	1.24e-03	1.24e-03	-3.90e-06
66	2	-7.51e-05	-1.84e-05	-7.72e-03	-8.01e-06	-8.00e-06	0.0
66	3	7.79e-04	-3.29e-04	0.02	8.25e-04	8.25e-04	-2.53e-06
66	4	0.14	8.66e-03	0.02	8.38e-04	9.10e-04	4.96e-04
66	5	-0.14	-9.32e-03	0.02	8.12e-04	7.40e-04	-5.01e-04
66	6	0.14	-9.58e-03	0.02	8.36e-04	9.09e-04	-5.50e-04
66	7	-0.14	8.92e-03	0.02	8.14e-04	7.42e-04	5.45e-04
66	8	-4.51e-06	0.14	0.02	7.47e-04	8.18e-04	5.56e-04
66	9	1.56e-03	-0.14	0.02	9.04e-04	8.33e-04	-5.61e-04
66	10	-8.86e-03	0.14	0.02	7.44e-04	8.15e-04	-5.02e-04

66	11	0.01	-0.14	0.02	9.07e-04	8.36e-04	4.97e-04
66	12	0.07	3.96e-03	0.02	8.31e-04	8.66e-04	2.31e-04
66	13	-0.07	-4.62e-03	0.02	8.19e-04	7.84e-04	-2.36e-04
66	14	0.07	-4.67e-03	0.02	8.31e-04	8.66e-04	-2.60e-04
66	15	-0.07	4.01e-03	0.02	8.20e-04	7.85e-04	2.54e-04
66	16	4.08e-04	0.07	0.02	7.87e-04	8.22e-04	2.59e-04
66	17	1.15e-03	-0.07	0.02	8.63e-04	8.29e-04	-2.64e-04
66	18	-3.86e-03	0.07	0.02	7.86e-04	8.20e-04	-2.37e-04
66	19	5.42e-03	-0.07	0.02	8.65e-04	8.30e-04	2.32e-04
66	20	7.79e-04	-3.29e-04	0.02	8.25e-04	8.25e-04	-2.53e-06
66	21	7.79e-04	-3.29e-04	0.02	8.25e-04	8.25e-04	-2.53e-06
66	22	7.79e-04	-3.29e-04	0.02	8.25e-04	8.25e-04	-2.53e-06
67	1	5.79e-03	-4.28e-03	-0.03	2.90e-04	2.89e-04	-4.07e-06
67	2	-1.99e-04	-1.06e-05	-7.21e-03	1.54e-06	1.55e-06	0.0
67	3	3.83e-03	-2.85e-03	-0.02	1.93e-04	1.93e-04	-2.64e-06
67	4	0.16	-0.05	-0.01	1.86e-04	2.67e-04	4.92e-04
67	5	-0.15	0.05	-0.03	2.01e-04	1.19e-04	-4.98e-04
67	6	0.15	0.04	-0.01	1.88e-04	2.65e-04	-5.47e-04
67	7	-0.14	-0.05	-0.03	1.98e-04	1.21e-04	5.42e-04
67	8	-0.05	0.15	-0.03	1.22e-04	2.00e-04	5.52e-04
67	9	0.06	-0.15	-0.01	2.64e-04	1.87e-04	-5.57e-04
67	10	0.05	0.14	-0.03	1.20e-04	1.99e-04	-4.99e-04
67	11	-0.04	-0.15	-0.01	2.66e-04	1.88e-04	4.94e-04
67	12	0.08	-0.03	-0.02	1.90e-04	2.29e-04	2.29e-04
67	13	-0.07	0.02	-0.02	1.97e-04	1.57e-04	-2.35e-04
67	14	0.07	0.02	-0.02	1.91e-04	2.28e-04	-2.58e-04
67	15	-0.06	-0.02	-0.02	1.96e-04	1.58e-04	2.53e-04
67	16	-0.02	0.07	-0.02	1.59e-04	1.96e-04	2.58e-04
67	17	0.03	-0.08	-0.02	2.28e-04	1.90e-04	-2.63e-04
67	18	0.03	0.07	-0.02	1.58e-04	1.96e-04	-2.36e-04
67	19	-0.02	-0.07	-0.02	2.28e-04	1.91e-04	2.30e-04
67	20	3.83e-03	-2.85e-03	-0.02	1.93e-04	1.93e-04	-2.64e-06
67	21	3.83e-03	-2.85e-03	-0.02	1.93e-04	1.93e-04	-2.64e-06
67	22	3.83e-03	-2.85e-03	-0.02	1.93e-04	1.93e-04	-2.64e-06
68	1	-1.86e-03	3.08e-03	2.67e-03	-9.23e-05	-9.23e-05	-4.07e-06
68	2	-9.66e-05	-7.10e-05	-7.50e-03	0.0	0.0	0.0
68	3	-1.26e-03	2.04e-03	7.80e-04	-6.15e-05	-6.15e-05	-2.64e-06
68	4	0.15	-0.03	4.78e-03	-6.59e-05	8.55e-06	4.99e-04
68	5	-0.15	0.03	-3.22e-03	-5.71e-05	-1.32e-04	-5.04e-04
68	6	0.14	0.03	4.63e-03	-6.42e-05	7.15e-06	-5.52e-04
68	7	-0.14	-0.02	-3.07e-03	-5.88e-05	-1.30e-04	5.47e-04
68	8	-0.04	0.15	-3.07e-03	-1.30e-04	-5.99e-05	5.59e-04
68	9	0.04	-0.14	4.63e-03	6.91e-06	-6.31e-05	-5.64e-04
68	10	0.03	0.15	-3.24e-03	-1.32e-04	-6.58e-05	-5.04e-04
68	11	-0.03	-0.14	4.80e-03	9.22e-06	-5.72e-05	4.99e-04
68	12	0.07	-0.01	2.71e-03	-6.36e-05	-2.75e-05	2.33e-04
68	13	-0.07	0.02	-1.15e-03	-5.93e-05	-9.55e-05	-2.38e-04
68	14	0.07	0.01	2.65e-03	-6.28e-05	-2.81e-05	-2.60e-04
68	15	-0.07	-0.01	-1.09e-03	-6.02e-05	-9.49e-05	2.55e-04
68	16	-0.02	0.07	-1.08e-03	-9.46e-05	-6.07e-05	2.61e-04
68	17	0.02	-0.07	2.64e-03	-2.83e-05	-6.23e-05	-2.66e-04
68	18	0.01	0.07	-1.16e-03	-9.57e-05	-6.36e-05	-2.38e-04
68	19	-0.01	-0.07	2.72e-03	-2.73e-05	-5.94e-05	2.32e-04
68	20	-1.26e-03	2.04e-03	7.80e-04	-6.15e-05	-6.15e-05	-2.64e-06
68	21	-1.26e-03	2.04e-03	7.80e-04	-6.15e-05	-6.15e-05	-2.64e-06
68	22	-1.26e-03	2.04e-03	7.80e-04	-6.15e-05	-6.15e-05	-2.64e-06
69	1	-0.04	0.04	-0.02	0.0	0.0	-4.05e-06
69	2	-1.05e-03	8.28e-04	-7.08e-03	0.0	0.0	0.0
69	3	-0.03	0.03	-0.01	0.0	0.0	-2.62e-06
69	4	0.11	-0.03	-5.40e-03	-1.33e-05	8.06e-05	4.98e-04
69	5	-0.16	0.08	-0.02	1.24e-05	-8.15e-05	-5.03e-04
69	6	0.10	0.08	-5.66e-03	-1.08e-05	7.80e-05	-5.54e-04
69	7	-0.16	-0.03	-0.02	1.00e-05	-7.89e-05	5.49e-04
69	8	-0.09	0.16	-0.02	-7.81e-05	1.17e-05	5.59e-04
69	9	0.04	-0.11	-5.68e-03	7.72e-05	-1.26e-05	-5.64e-04
69	10	0.03	0.16	-0.02	-7.96e-05	9.28e-06	-5.06e-04
69	11	-0.08	-0.10	-5.34e-03	7.88e-05	-1.02e-05	5.00e-04
69	12	0.04	1.32e-03	-9.25e-03	-6.80e-06	3.90e-05	2.32e-04
69	13	-0.09	0.05	-0.02	5.96e-06	-3.99e-05	-2.37e-04
69	14	0.04	0.05	-9.36e-03	-5.40e-06	3.75e-05	-2.61e-04
69	15	-0.09	1.95e-03	-0.02	4.55e-06	-3.85e-05	2.56e-04
69	16	-0.06	0.09	-0.02	-3.82e-05	5.51e-06	2.61e-04
69	17	3.84e-03	-0.04	-9.38e-03	3.74e-05	-6.43e-06	-2.66e-04
69	18	-1.55e-03	0.09	-0.02	-3.86e-05	4.19e-06	-2.38e-04
69	19	-0.05	-0.03	-9.22e-03	3.78e-05	-5.12e-06	2.33e-04
69	20	-0.03	0.03	-0.01	0.0	0.0	-2.62e-06
69	21	-0.03	0.03	-0.01	0.0	0.0	-2.62e-06

69	22	-0.03	0.03	-0.01	0.0	0.0	-2.62e-06
70	1	-6.17e-03	6.19e-03	-4.87e-03	1.76e-06	1.03e-06	-3.68e-06
70	2	-1.54e-03	1.54e-03	-3.75e-03	-2.56e-05	-2.55e-05	0.0
70	3	-4.32e-03	4.33e-03	-3.75e-03	-2.24e-06	-2.71e-06	-2.38e-06
70	4	0.10	0.05	-7.52e-03	1.87e-04	3.18e-04	4.69e-04
70	5	-0.11	-0.04	2.52e-05	-1.92e-04	-3.23e-04	-4.74e-04
70	6	0.11	-0.05	-7.38e-03	1.76e-04	3.13e-04	-5.10e-04
70	7	-0.12	0.06	-1.16e-04	-1.80e-04	-3.19e-04	5.05e-04
70	8	0.04	0.12	-1.29e-04	-2.96e-04	-1.67e-04	5.23e-04
70	9	-0.05	-0.11	-7.36e-03	2.92e-04	1.61e-04	-5.28e-04
70	10	-0.05	0.12	3.62e-05	-3.11e-04	-1.73e-04	-4.65e-04
70	11	0.04	-0.11	-7.53e-03	3.06e-04	1.68e-04	4.61e-04
70	12	0.05	0.03	-5.57e-03	8.98e-05	1.52e-04	2.20e-04
70	13	-0.06	-0.02	-1.92e-03	-9.43e-05	-1.57e-04	-2.25e-04
70	14	0.05	-0.02	-5.51e-03	8.32e-05	1.51e-04	-2.40e-04
70	15	-0.06	0.03	-1.98e-03	-8.77e-05	-1.57e-04	2.35e-04
70	16	0.02	0.06	-1.99e-03	-1.44e-04	-8.28e-05	2.45e-04
70	17	-0.03	-0.05	-5.50e-03	1.39e-04	7.74e-05	-2.50e-04
70	18	-0.03	0.06	-1.92e-03	-1.52e-04	-8.41e-05	-2.18e-04
70	19	0.02	-0.05	-5.57e-03	1.47e-04	7.87e-05	2.14e-04
70	20	-4.32e-03	4.33e-03	-3.75e-03	-2.24e-06	-2.71e-06	-2.38e-06
70	21	-4.32e-03	4.33e-03	-3.75e-03	-2.24e-06	-2.71e-06	-2.38e-06
70	22	-4.32e-03	4.33e-03	-3.75e-03	-2.24e-06	-2.71e-06	-2.38e-06
71	1	0.02	-0.02	-0.02	-1.29e-03	-1.29e-03	-4.20e-06
71	2	6.60e-04	-6.42e-04	-6.32e-03	-3.50e-06	-3.47e-06	0.0
71	3	0.01	-0.01	-0.02	-8.61e-04	-8.61e-04	-2.72e-06
71	4	0.13	0.04	-0.02	-9.09e-04	-8.78e-04	5.01e-04
71	5	-0.10	-0.07	-8.48e-03	-8.12e-04	-8.44e-04	-5.07e-04
71	6	0.14	-0.07	-0.02	-9.09e-04	-8.46e-04	-5.57e-04
71	7	-0.11	0.05	-8.75e-03	-8.13e-04	-8.76e-04	5.52e-04
71	8	0.07	0.11	-8.78e-03	-8.87e-04	-8.24e-04	5.62e-04
71	9	-0.04	-0.13	-0.02	-8.35e-04	-8.98e-04	-5.67e-04
71	10	-0.04	0.11	-8.49e-03	-8.86e-04	-8.24e-04	-5.09e-04
71	11	0.07	-0.14	-0.02	-8.36e-04	-8.98e-04	5.03e-04
71	12	0.07	0.01	-0.02	-8.84e-04	-8.69e-04	2.33e-04
71	13	-0.04	-0.04	-0.01	-8.37e-04	-8.53e-04	-2.39e-04
71	14	0.07	-0.04	-0.02	-8.84e-04	-8.54e-04	-2.63e-04
71	15	-0.05	0.02	-0.01	-8.38e-04	-8.68e-04	2.58e-04
71	16	0.04	0.04	-0.01	-8.74e-04	-8.43e-04	2.62e-04
71	17	-0.01	-0.07	-0.02	-8.48e-04	-8.79e-04	-2.68e-04
71	18	-0.01	0.05	-0.01	-8.73e-04	-8.43e-04	-2.40e-04
71	19	0.04	-0.07	-0.02	-8.49e-04	-8.79e-04	2.35e-04
71	20	0.01	-0.01	-0.02	-8.61e-04	-8.61e-04	-2.72e-06
71	21	0.01	-0.01	-0.02	-8.61e-04	-8.61e-04	-2.72e-06
71	22	0.01	-0.01	-0.02	-8.61e-04	-8.61e-04	-2.72e-06
72	1	5.91e-03	-4.37e-03	-8.08e-03	-2.89e-04	-2.89e-04	-4.08e-06
72	2	-5.51e-05	-1.58e-04	-6.81e-03	0.0	0.0	0.0
72	3	3.93e-03	-2.94e-03	-6.29e-03	-1.93e-04	-1.93e-04	-2.64e-06
72	4	0.12	-0.05	1.10e-04	-2.03e-04	-1.08e-04	4.86e-04
72	5	-0.12	0.04	-0.01	-1.83e-04	-2.78e-04	-4.91e-04
72	6	0.11	0.04	-1.04e-04	-1.99e-04	-1.10e-04	-5.42e-04
72	7	-0.11	-0.05	-0.01	-1.86e-04	-2.75e-04	5.37e-04
72	8	-0.05	0.11	-0.01	-2.75e-04	-1.83e-04	5.45e-04
72	9	0.06	-0.12	-1.37e-04	-1.11e-04	-2.02e-04	-5.51e-04
72	10	0.05	0.11	-0.01	-2.77e-04	-1.86e-04	-4.95e-04
72	11	-0.04	-0.11	1.70e-04	-1.09e-04	-2.00e-04	4.90e-04
72	12	0.06	-0.03	-3.19e-03	-1.98e-04	-1.51e-04	2.26e-04
72	13	-0.05	0.02	-9.39e-03	-1.88e-04	-2.34e-04	-2.31e-04
72	14	0.06	0.02	-3.29e-03	-1.96e-04	-1.53e-04	-2.56e-04
72	15	-0.05	-0.02	-9.30e-03	-1.89e-04	-2.33e-04	2.51e-04
72	16	-0.02	0.06	-9.27e-03	-2.32e-04	-1.88e-04	2.54e-04
72	17	0.03	-0.06	-3.31e-03	-1.53e-04	-1.97e-04	-2.59e-04
72	18	0.03	0.05	-9.41e-03	-2.33e-04	-1.89e-04	-2.34e-04
72	19	-0.02	-0.06	-3.17e-03	-1.52e-04	-1.96e-04	2.29e-04
72	20	3.93e-03	-2.94e-03	-6.29e-03	-1.93e-04	-1.93e-04	-2.64e-06
72	21	3.93e-03	-2.94e-03	-6.29e-03	-1.93e-04	-1.93e-04	-2.64e-06
72	22	3.93e-03	-2.94e-03	-6.29e-03	-1.93e-04	-1.93e-04	-2.64e-06
73	1	-1.90e-03	3.14e-03	-0.04	9.16e-05	9.16e-05	-4.06e-06
73	2	-1.48e-04	-2.34e-05	-7.24e-03	-1.49e-06	-1.49e-06	0.0
73	3	-1.29e-03	2.09e-03	-0.03	6.09e-05	6.09e-05	-2.63e-06
73	4	0.11	-0.03	-0.02	4.56e-05	1.28e-04	5.05e-04
73	5	-0.11	0.03	-0.03	7.62e-05	-5.80e-06	-5.10e-04
73	6	0.10	0.03	-0.02	4.57e-05	1.26e-04	-5.55e-04
73	7	-0.10	-0.02	-0.03	7.60e-05	-4.25e-06	5.50e-04
73	8	-0.04	0.11	-0.03	-2.53e-06	7.66e-05	5.65e-04
73	9	0.03	-0.11	-0.02	1.24e-04	4.51e-05	-5.70e-04
73	10	0.03	0.11	-0.03	-4.34e-06	7.62e-05	-5.07e-04

73	11	-0.03	-0.10	-0.02	1.26e-04	4.56e-05	5.01e-04
73	12	0.05	-0.01	-0.02	5.34e-05	9.33e-05	2.36e-04
73	13	-0.06	0.02	-0.03	6.84e-05	2.85e-05	-2.41e-04
73	14	0.05	0.01	-0.02	5.35e-05	9.25e-05	-2.62e-04
73	15	-0.05	-0.01	-0.03	6.83e-05	2.93e-05	2.56e-04
73	16	-0.02	0.05	-0.03	3.01e-05	6.86e-05	2.64e-04
73	17	0.02	-0.05	-0.02	9.16e-05	5.32e-05	-2.69e-04
73	18	0.01	0.05	-0.03	2.93e-05	6.83e-05	-2.39e-04
73	19	-0.01	-0.05	-0.02	9.24e-05	5.34e-05	2.33e-04
73	20	-1.29e-03	2.09e-03	-0.03	6.09e-05	6.09e-05	-2.63e-06
73	21	-1.29e-03	2.09e-03	-0.03	6.09e-05	6.09e-05	-2.63e-06
73	22	-1.29e-03	2.09e-03	-0.03	6.09e-05	6.09e-05	-2.63e-06
74	1	0.03	6.48e-03	-0.02	4.54e-04	-1.70e-03	-4.07e-06
74	2	1.83e-04	1.34e-04	-7.05e-03	-3.23e-06	1.21e-05	0.0
74	3	0.02	4.34e-03	-0.02	3.02e-04	-1.13e-03	-2.64e-06
74	4	0.13	0.08	-0.03	2.93e-04	-1.05e-03	4.95e-04
74	5	-0.09	-0.07	-6.08e-03	3.12e-04	-1.20e-03	-5.00e-04
74	6	0.12	-0.08	-0.03	2.94e-04	-1.05e-03	-5.49e-04
74	7	-0.09	0.09	-6.26e-03	3.10e-04	-1.20e-03	5.43e-04
74	8	-7.81e-03	0.13	-0.02	2.51e-04	-1.12e-03	5.55e-04
74	9	0.04	-0.13	-0.01	3.54e-04	-1.14e-03	-5.60e-04
74	10	0.04	0.14	-0.02	2.51e-04	-1.12e-03	-5.01e-04
74	11	-1.68e-03	-0.13	-0.01	3.54e-04	-1.14e-03	4.96e-04
74	12	0.07	0.04	-0.02	2.98e-04	-1.09e-03	2.31e-04
74	13	-0.04	-0.03	-0.01	3.07e-04	-1.17e-03	-2.36e-04
74	14	0.07	-0.03	-0.02	2.99e-04	-1.09e-03	-2.59e-04
74	15	-0.03	0.04	-0.01	3.06e-04	-1.17e-03	2.54e-04
74	16	5.66e-03	0.06	-0.02	2.77e-04	-1.12e-03	2.59e-04
74	17	0.03	-0.06	-0.01	3.27e-04	-1.13e-03	-2.64e-04
74	18	0.03	0.07	-0.02	2.78e-04	-1.12e-03	-2.36e-04
74	19	8.57e-03	-0.06	-0.01	3.27e-04	-1.13e-03	2.31e-04
74	20	0.02	4.34e-03	-0.02	3.02e-04	-1.13e-03	-2.64e-06
74	21	0.02	4.34e-03	-0.02	3.02e-04	-1.13e-03	-2.64e-06
74	22	0.02	4.34e-03	-0.02	3.02e-04	-1.13e-03	-2.64e-06
75	1	0.03	6.43e-03	-0.01	-4.57e-04	1.71e-03	-4.07e-06
75	2	8.01e-05	1.06e-04	-7.15e-03	0.0	-1.27e-06	0.0
75	3	0.02	4.30e-03	-9.47e-03	-3.05e-04	1.14e-03	-2.64e-06
75	4	0.16	0.08	-0.02	-3.12e-04	1.21e-03	4.97e-04
75	5	-0.12	-0.07	7.15e-04	-2.98e-04	1.07e-03	-5.02e-04
75	6	0.15	-0.08	-0.02	-3.09e-04	1.20e-03	-5.51e-04
75	7	-0.12	0.09	5.02e-04	-3.01e-04	1.07e-03	5.45e-04
75	8	-8.85e-03	0.16	-0.01	-3.61e-04	1.14e-03	5.57e-04
75	9	0.04	-0.15	-6.74e-03	-2.48e-04	1.13e-03	-5.62e-04
75	10	0.04	0.17	-0.01	-3.63e-04	1.14e-03	-5.03e-04
75	11	-1.98e-03	-0.16	-6.73e-03	-2.47e-04	1.13e-03	4.98e-04
75	12	0.09	0.04	-0.01	-3.08e-04	1.17e-03	2.32e-04
75	13	-0.05	-0.03	-4.52e-03	-3.01e-04	1.10e-03	-2.37e-04
75	14	0.08	-0.04	-0.01	-3.07e-04	1.17e-03	-2.60e-04
75	15	-0.05	0.04	-4.62e-03	-3.03e-04	1.11e-03	2.55e-04
75	16	5.09e-03	0.08	-0.01	-3.32e-04	1.14e-03	2.60e-04
75	17	0.03	-0.07	-8.14e-03	-2.77e-04	1.14e-03	-2.65e-04
75	18	0.03	0.08	-0.01	-3.33e-04	1.14e-03	-2.37e-04
75	19	8.37e-03	-0.08	-8.13e-03	-2.77e-04	1.13e-03	2.32e-04
75	20	0.02	4.30e-03	-9.47e-03	-3.05e-04	1.14e-03	-2.64e-06
75	21	0.02	4.30e-03	-9.47e-03	-3.05e-04	1.14e-03	-2.64e-06
75	22	0.02	4.30e-03	-9.47e-03	-3.05e-04	1.14e-03	-2.64e-06
76	1	0.02	-0.02	-0.01	1.26e-03	1.26e-03	-4.06e-06
76	2	-1.01e-04	1.22e-04	-7.35e-03	2.57e-05	2.58e-05	0.0
76	3	0.01	-0.01	-9.71e-03	8.42e-04	8.42e-04	-2.63e-06
76	4	0.15	0.04	-0.02	8.14e-04	8.78e-04	4.96e-04
76	5	-0.13	-0.06	-2.17e-03	8.69e-04	8.06e-04	-5.01e-04
76	6	0.16	-0.08	-0.02	8.16e-04	8.77e-04	-5.49e-04
76	7	-0.14	0.05	-2.41e-03	8.67e-04	8.06e-04	5.44e-04
76	8	0.07	0.13	-2.48e-03	7.97e-04	8.60e-04	5.56e-04
76	9	-0.04	-0.16	-0.02	8.87e-04	8.23e-04	-5.61e-04
76	10	-0.04	0.14	-2.11e-03	7.95e-04	8.58e-04	-5.01e-04
76	11	0.07	-0.17	-0.02	8.88e-04	8.26e-04	4.96e-04
76	12	0.08	0.01	-0.01	8.28e-04	8.59e-04	2.31e-04
76	13	-0.06	-0.04	-6.06e-03	8.55e-04	8.24e-04	-2.37e-04
76	14	0.09	-0.04	-0.01	8.29e-04	8.59e-04	-2.59e-04
76	15	-0.06	0.02	-6.17e-03	8.54e-04	8.25e-04	2.54e-04
76	16	0.04	0.06	-6.21e-03	8.20e-04	8.51e-04	2.59e-04
76	17	-0.01	-0.08	-0.01	8.64e-04	8.33e-04	-2.65e-04
76	18	-0.01	0.06	-6.04e-03	8.19e-04	8.49e-04	-2.36e-04
76	19	0.04	-0.09	-0.01	8.64e-04	8.34e-04	2.31e-04
76	20	0.01	-0.01	-9.71e-03	8.42e-04	8.42e-04	-2.63e-06
76	21	0.01	-0.01	-9.71e-03	8.42e-04	8.42e-04	-2.63e-06

76	22	0.01	-0.01	-9.71e-03	8.42e-04	8.42e-04	-2.63e-06
77	1	2.93e-03	-2.62e-03	-0.04	-1.51e-04	-1.51e-04	-3.84e-06
77	2	-1.25e-05	-2.77e-05	-7.69e-03	2.11e-05	2.11e-05	0.0
77	3	1.95e-03	-1.75e-03	-0.03	-9.80e-05	-9.79e-05	-2.49e-06
77	4	0.11	0.03	-0.03	-3.79e-04	-3.14e-04	5.13e-04
77	5	-0.10	-0.03	-0.02	1.83e-04	1.19e-04	-5.18e-04
77	6	0.11	-0.04	-0.03	-3.69e-04	-3.06e-04	-5.72e-04
77	7	-0.11	0.03	-0.02	1.73e-04	1.10e-04	5.67e-04
77	8	0.03	0.10	-0.02	9.42e-05	1.57e-04	5.75e-04
77	9	-0.03	-0.11	-0.03	-2.90e-04	-3.53e-04	-5.80e-04
77	10	-0.03	0.11	-0.02	1.04e-04	1.67e-04	-5.23e-04
77	11	0.03	-0.11	-0.03	-3.00e-04	-3.63e-04	5.18e-04
77	12	0.05	0.01	-0.03	-2.34e-04	-2.03e-04	2.38e-04
77	13	-0.05	-0.01	-0.03	3.79e-05	6.69e-06	-2.43e-04
77	14	0.05	-0.02	-0.03	-2.30e-04	-1.99e-04	-2.71e-04
77	15	-0.05	0.01	-0.03	3.36e-05	3.12e-06	2.66e-04
77	16	0.02	0.05	-0.03	-5.00e-06	2.56e-05	2.68e-04
77	17	-0.01	-0.05	-0.03	-1.91e-04	-2.21e-04	-2.73e-04
77	18	-0.01	0.05	-0.03	0.0	3.00e-05	-2.47e-04
77	19	0.02	-0.06	-0.03	-1.96e-04	-2.26e-04	2.42e-04
77	20	1.95e-03	-1.75e-03	-0.03	-9.80e-05	-9.79e-05	-2.49e-06
77	21	1.95e-03	-1.75e-03	-0.03	-9.80e-05	-9.79e-05	-2.49e-06
77	22	1.95e-03	-1.75e-03	-0.03	-9.80e-05	-9.79e-05	-2.49e-06
78	1	-4.71e-03	4.71e-03	-0.03	-3.03e-04	-3.03e-04	-4.07e-06
78	2	4.08e-05	-3.50e-05	-7.24e-03	-6.16e-06	-6.15e-06	0.0
78	3	-3.13e-03	3.13e-03	-0.02	-2.03e-04	-2.03e-04	-2.64e-06
78	4	0.14	0.05	-0.03	-1.80e-04	-1.07e-04	4.95e-04
78	5	-0.15	-0.04	-0.01	-2.26e-04	-2.99e-04	-5.00e-04
78	6	0.15	-0.05	-0.03	-1.82e-04	-1.08e-04	-5.48e-04
78	7	-0.15	0.06	-0.01	-2.24e-04	-2.97e-04	5.42e-04
78	8	0.04	0.15	-0.01	-2.88e-04	-2.17e-04	5.55e-04
78	9	-0.05	-0.14	-0.03	-1.18e-04	-1.89e-04	-5.60e-04
78	10	-0.05	0.16	-0.01	-2.91e-04	-2.20e-04	-5.00e-04
78	11	0.05	-0.15	-0.03	-1.14e-04	-1.86e-04	4.95e-04
78	12	0.06	0.02	-0.02	-1.92e-04	-1.56e-04	2.31e-04
78	13	-0.07	-0.02	-0.02	-2.14e-04	-2.49e-04	-2.36e-04
78	14	0.07	-0.02	-0.02	-1.93e-04	-1.57e-04	-2.58e-04
78	15	-0.08	0.03	-0.02	-2.13e-04	-2.49e-04	2.53e-04
78	16	0.02	0.07	-0.02	-2.44e-04	-2.10e-04	2.59e-04
78	17	-0.03	-0.06	-0.02	-1.62e-04	-1.96e-04	-2.64e-04
78	18	-0.03	0.08	-0.02	-2.46e-04	-2.11e-04	-2.36e-04
78	19	0.02	-0.07	-0.02	-1.60e-04	-1.95e-04	2.30e-04
78	20	-3.13e-03	3.13e-03	-0.02	-2.03e-04	-2.03e-04	-2.64e-06
78	21	-3.13e-03	3.13e-03	-0.02	-2.03e-04	-2.03e-04	-2.64e-06
78	22	-3.13e-03	3.13e-03	-0.02	-2.03e-04	-2.03e-04	-2.64e-06
79	1	2.95e-03	-2.66e-03	2.66e-03	8.60e-05	8.60e-05	-4.07e-06
79	2	-5.58e-05	1.96e-05	-7.51e-03	-1.64e-06	-1.63e-06	0.0
79	3	1.96e-03	-1.77e-03	7.70e-04	5.71e-05	5.71e-05	-2.64e-06
79	4	0.14	0.03	-3.21e-03	4.02e-05	1.09e-04	4.97e-04
79	5	-0.14	-0.03	4.75e-03	7.41e-05	5.49e-06	-5.03e-04
79	6	0.15	-0.04	-3.08e-03	4.04e-05	1.07e-04	-5.51e-04
79	7	-0.14	0.03	4.62e-03	7.38e-05	7.02e-06	5.46e-04
79	8	0.03	0.14	4.61e-03	1.81e-06	6.89e-05	5.57e-04
79	9	-0.02	-0.14	-3.07e-03	1.12e-04	4.53e-05	-5.63e-04
79	10	-0.03	0.15	4.81e-03	0.0	6.81e-05	-5.03e-04
79	11	0.03	-0.15	-3.27e-03	1.14e-04	4.62e-05	4.98e-04
79	12	0.07	0.01	-1.16e-03	4.89e-05	8.22e-05	2.32e-04
79	13	-0.07	-0.01	2.70e-03	6.54e-05	3.20e-05	-2.37e-04
79	14	0.07	-0.02	-1.10e-03	4.90e-05	8.14e-05	-2.60e-04
79	15	-0.07	0.02	2.64e-03	6.53e-05	3.28e-05	2.55e-04
79	16	0.01	0.07	2.63e-03	3.03e-05	6.29e-05	2.60e-04
79	17	-0.01	-0.07	-1.09e-03	8.40e-05	5.13e-05	-2.65e-04
79	18	-0.01	0.07	2.72e-03	2.97e-05	6.24e-05	-2.37e-04
79	19	0.02	-0.07	-1.18e-03	8.46e-05	5.18e-05	2.32e-04
79	20	1.96e-03	-1.77e-03	7.70e-04	5.71e-05	5.71e-05	-2.64e-06
79	21	1.96e-03	-1.77e-03	7.70e-04	5.71e-05	5.71e-05	-2.64e-06
79	22	1.96e-03	-1.77e-03	7.70e-04	5.71e-05	5.71e-05	-2.64e-06
80	1	0.04	-0.04	-0.02	1.03e-06	0.0	-4.03e-06
80	2	-8.81e-04	9.01e-04	-7.09e-03	2.65e-05	2.66e-05	0.0
80	3	0.02	-0.02	-0.01	4.23e-06	4.16e-06	-2.61e-06
80	4	0.15	0.03	-0.02	3.82e-05	1.19e-04	4.91e-04
80	5	-0.10	-0.08	-5.44e-03	-2.98e-05	-1.11e-04	-4.96e-04
80	6	0.16	-0.09	-0.02	3.57e-05	1.18e-04	-5.41e-04
80	7	-0.11	0.04	-5.71e-03	-2.72e-05	-1.09e-04	5.35e-04
80	8	0.08	0.11	-5.75e-03	-9.62e-05	-1.76e-05	5.50e-04
80	9	-0.03	-0.16	-0.02	1.05e-04	2.59e-05	-5.55e-04
80	10	-0.03	0.11	-5.41e-03	-1.00e-04	-2.09e-05	-4.93e-04

80	11	0.08	-0.16	-0.02	1.09e-04	2.92e-05	4.88e-04
80	12	0.08	-8.61e-05	-0.02	2.06e-05	5.99e-05	2.29e-04
80	13	-0.04	-0.05	-9.27e-03	-1.22e-05	-5.16e-05	-2.34e-04
80	14	0.09	-0.05	-0.02	1.93e-05	5.95e-05	-2.55e-04
80	15	-0.04	5.01e-03	-9.39e-03	-1.09e-05	-5.12e-05	2.50e-04
80	16	0.05	0.04	-9.42e-03	-4.43e-05	-6.46e-06	2.57e-04
80	17	-1.37e-03	-0.09	-0.02	5.28e-05	1.48e-05	-2.62e-04
80	18	-1.35e-03	0.04	-9.26e-03	-4.63e-05	-7.63e-06	-2.32e-04
80	19	0.05	-0.09	-0.02	5.48e-05	1.60e-05	2.27e-04
80	20	0.02	-0.02	-0.01	4.23e-06	4.16e-06	-2.61e-06
80	21	0.02	-0.02	-0.01	4.23e-06	4.16e-06	-2.61e-06
80	22	0.02	-0.02	-0.01	4.23e-06	4.16e-06	-2.61e-06
81	1	1.01e-03	-6.47e-04	-0.07	-1.54e-03	-8.87e-04	3.21e-06
81	2	-7.62e-05	-2.73e-05	-7.33e-03	-1.36e-05	-9.93e-06	-1.33e-05
81	3	6.62e-04	-4.35e-04	-0.05	-1.03e-03	-5.93e-04	0.0
81	4	0.10	-7.07e-03	-0.05	-9.09e-04	-3.44e-04	5.13e-04
81	5	-0.10	6.20e-03	-0.05	-1.15e-03	-8.41e-04	-5.12e-04
81	6	0.10	-7.34e-03	-0.05	-9.12e-04	-3.51e-04	-5.55e-04
81	7	-0.10	6.47e-03	-0.05	-1.14e-03	-8.35e-04	5.56e-04
81	8	1.91e-03	0.10	-0.05	-1.20e-03	-7.03e-04	5.69e-04
81	9	-5.89e-04	-0.10	-0.05	-8.58e-04	-4.83e-04	-5.68e-04
81	10	-7.26e-03	0.10	-0.05	-1.20e-03	-7.10e-04	-5.18e-04
81	11	8.59e-03	-0.10	-0.05	-8.54e-04	-4.76e-04	5.18e-04
81	12	0.05	-3.60e-03	-0.05	-9.71e-04	-4.73e-04	2.42e-04
81	13	-0.05	2.73e-03	-0.05	-1.08e-03	-7.13e-04	-2.41e-04
81	14	0.05	-3.66e-03	-0.05	-9.71e-04	-4.75e-04	-2.59e-04
81	15	-0.05	2.79e-03	-0.05	-1.08e-03	-7.11e-04	2.60e-04
81	16	1.25e-03	0.05	-0.05	-1.11e-03	-6.46e-04	2.65e-04
81	17	7.04e-05	-0.05	-0.05	-9.45e-04	-5.39e-04	-2.65e-04
81	18	-3.14e-03	0.05	-0.05	-1.11e-03	-6.49e-04	-2.44e-04
81	19	4.46e-03	-0.05	-0.05	-9.44e-04	-5.37e-04	2.45e-04
81	20	6.62e-04	-4.35e-04	-0.05	-1.03e-03	-5.93e-04	0.0
81	21	6.62e-04	-4.35e-04	-0.05	-1.03e-03	-5.93e-04	0.0
81	22	6.62e-04	-4.35e-04	-0.05	-1.03e-03	-5.93e-04	0.0
82	1	1.20e-04	1.06e-03	-0.07	1.55e-03	8.93e-04	-4.30e-06
82	2	-9.14e-05	-2.22e-05	-7.33e-03	1.06e-05	5.57e-06	1.59e-06
82	3	6.75e-05	7.06e-04	-0.05	1.03e-03	5.96e-04	-2.66e-06
82	4	0.10	-6.45e-03	-0.05	9.61e-04	7.43e-04	5.02e-04
82	5	-0.10	7.86e-03	-0.05	1.10e-03	4.49e-04	-5.07e-04
82	6	0.10	-9.05e-04	-0.05	9.63e-04	7.40e-04	-5.44e-04
82	7	-0.10	2.32e-03	-0.05	1.10e-03	4.52e-04	5.39e-04
82	8	-8.35e-03	0.10	-0.05	8.66e-04	6.72e-04	5.60e-04
82	9	8.48e-03	-0.10	-0.05	1.20e-03	5.20e-04	-5.65e-04
82	10	6.79e-03	0.10	-0.05	8.63e-04	6.72e-04	-4.97e-04
82	11	-6.65e-03	-0.10	-0.05	1.20e-03	5.20e-04	4.91e-04
82	12	0.05	-2.74e-03	-0.05	9.97e-04	6.67e-04	2.35e-04
82	13	-0.05	4.15e-03	-0.05	1.07e-03	5.25e-04	-2.41e-04
82	14	0.05	-4.20e-05	-0.05	9.99e-04	6.66e-04	-2.56e-04
82	15	-0.05	1.45e-03	-0.05	1.07e-03	5.26e-04	2.50e-04
82	16	-3.88e-03	0.05	-0.05	9.52e-04	6.33e-04	2.63e-04
82	17	4.01e-03	-0.05	-0.05	1.11e-03	5.59e-04	-2.68e-04
82	18	3.25e-03	0.05	-0.05	9.51e-04	6.33e-04	-2.33e-04
82	19	-3.12e-03	-0.05	-0.05	1.11e-03	5.59e-04	2.28e-04
82	20	6.75e-05	7.06e-04	-0.05	1.03e-03	5.96e-04	-2.66e-06
82	21	6.75e-05	7.06e-04	-0.05	1.03e-03	5.96e-04	-2.66e-06
82	22	6.75e-05	7.06e-04	-0.05	1.03e-03	5.96e-04	-2.66e-06
83	1	-0.01	0.02	-0.02	1.52e-03	8.77e-04	0.0
83	2	-3.57e-04	1.81e-04	-6.98e-03	-9.47e-06	-6.28e-06	6.40e-06
83	3	-8.20e-03	0.02	-0.02	1.01e-03	5.84e-04	1.28e-06
83	4	0.12	-0.02	-0.01	1.01e-03	6.63e-04	4.97e-04
83	5	-0.14	0.05	-0.02	1.02e-03	5.05e-04	-4.94e-04
83	6	0.11	0.05	-0.01	1.01e-03	6.61e-04	-5.43e-04
83	7	-0.13	-0.02	-0.02	1.02e-03	5.07e-04	5.46e-04
83	8	-0.08	0.13	-0.02	9.33e-04	5.76e-04	5.56e-04
83	9	0.07	-0.10	-7.59e-03	1.09e-03	5.91e-04	-5.54e-04
83	10	0.06	0.13	-0.03	9.29e-04	5.77e-04	-4.96e-04
83	11	-0.07	-0.10	-7.21e-03	1.10e-03	5.90e-04	4.98e-04
83	12	0.06	-2.64e-03	-0.01	1.01e-03	6.22e-04	2.33e-04
83	13	-0.07	0.03	-0.02	1.02e-03	5.45e-04	-2.31e-04
83	14	0.05	0.03	-0.01	1.01e-03	6.21e-04	-2.54e-04
83	15	-0.07	-1.59e-03	-0.02	1.02e-03	5.47e-04	2.57e-04
83	16	-0.04	0.07	-0.02	9.74e-04	5.80e-04	2.62e-04
83	17	0.03	-0.04	-0.01	1.05e-03	5.87e-04	-2.59e-04
83	18	0.02	0.07	-0.02	9.73e-04	5.81e-04	-2.32e-04
83	19	-0.04	-0.04	-0.01	1.05e-03	5.87e-04	2.34e-04
83	20	-8.20e-03	0.02	-0.02	1.01e-03	5.84e-04	1.28e-06
83	21	-8.20e-03	0.02	-0.02	1.01e-03	5.84e-04	1.28e-06

83	22	-8.20e-03	0.02	-0.02	1.01e-03	5.84e-04	1.28e-06
84	1	-0.01	0.02	-0.01	-1.54e-03	-8.81e-04	-7.35e-06
84	2	-2.43e-04	3.71e-05	-7.18e-03	-4.34e-06	1.73e-06	-1.65e-06
84	3	-8.09e-03	0.02	-9.51e-03	-1.03e-03	-5.87e-04	-5.12e-06
84	4	0.15	-0.02	-4.26e-03	-1.04e-03	-5.10e-04	4.93e-04
84	5	-0.17	0.06	-0.01	-1.01e-03	-6.65e-04	-5.03e-04
84	6	0.14	0.05	-4.53e-03	-1.04e-03	-5.13e-04	-5.52e-04
84	7	-0.16	-0.02	-0.01	-1.01e-03	-6.62e-04	5.42e-04
84	8	-0.09	0.16	-0.02	-1.11e-03	-5.79e-04	5.53e-04
84	9	0.07	-0.13	-6.87e-04	-9.45e-04	-5.95e-04	-5.63e-04
84	10	0.06	0.16	-0.02	-1.11e-03	-5.81e-04	-5.04e-04
84	11	-0.07	-0.12	-3.53e-04	-9.45e-04	-5.94e-04	4.94e-04
84	12	0.07	-3.25e-03	-6.98e-03	-1.03e-03	-5.49e-04	2.29e-04
84	13	-0.09	0.03	-0.01	-1.02e-03	-6.25e-04	-2.39e-04
84	14	0.06	0.03	-7.10e-03	-1.03e-03	-5.51e-04	-2.62e-04
84	15	-0.08	-1.36e-03	-0.01	-1.02e-03	-6.23e-04	2.52e-04
84	16	-0.04	0.09	-0.01	-1.06e-03	-5.83e-04	2.57e-04
84	17	0.03	-0.05	-5.23e-03	-9.86e-04	-5.91e-04	-2.67e-04
84	18	0.02	0.08	-0.01	-1.06e-03	-5.84e-04	-2.39e-04
84	19	-0.04	-0.05	-5.09e-03	-9.87e-04	-5.90e-04	2.29e-04
84	20	-8.09e-03	0.02	-9.51e-03	-1.03e-03	-5.87e-04	-5.12e-06
84	21	-8.09e-03	0.02	-9.51e-03	-1.03e-03	-5.87e-04	-5.12e-06
84	22	-8.09e-03	0.02	-9.51e-03	-1.03e-03	-5.87e-04	-5.12e-06
85	1	1.07e-04	1.05e-03	0.04	-1.52e-03	-8.79e-04	-3.33e-06
85	2	-7.80e-05	-3.36e-05	-7.72e-03	8.72e-06	5.10e-06	0.0
85	3	6.09e-05	6.92e-04	0.02	-1.01e-03	-5.85e-04	-2.13e-06
85	4	0.14	-8.92e-03	0.02	-1.01e-03	-5.14e-04	4.90e-04
85	5	-0.14	0.01	0.02	-1.02e-03	-6.56e-04	-4.95e-04
85	6	0.14	-2.11e-03	0.02	-1.01e-03	-5.16e-04	-5.43e-04
85	7	-0.14	3.49e-03	0.02	-1.02e-03	-6.54e-04	5.39e-04
85	8	-9.51e-03	0.14	0.02	-1.08e-03	-5.88e-04	5.50e-04
85	9	9.63e-03	-0.14	0.02	-9.49e-04	-5.82e-04	-5.54e-04
85	10	8.58e-03	0.14	0.02	-1.08e-03	-5.90e-04	-4.96e-04
85	11	-8.45e-03	-0.14	0.02	-9.47e-04	-5.81e-04	4.92e-04
85	12	0.07	-3.95e-03	0.02	-1.01e-03	-5.51e-04	2.29e-04
85	13	-0.07	5.33e-03	0.02	-1.02e-03	-6.19e-04	-2.33e-04
85	14	0.07	-6.21e-04	0.02	-1.01e-03	-5.52e-04	-2.56e-04
85	15	-0.07	2.01e-03	0.02	-1.02e-03	-6.18e-04	2.52e-04
85	16	-4.43e-03	0.07	0.02	-1.04e-03	-5.86e-04	2.57e-04
85	17	4.56e-03	-0.07	0.02	-9.82e-04	-5.84e-04	-2.61e-04
85	18	4.12e-03	0.07	0.02	-1.05e-03	-5.87e-04	-2.34e-04
85	19	-4.00e-03	-0.07	0.02	-9.81e-04	-5.83e-04	2.29e-04
85	20	6.09e-05	6.92e-04	0.02	-1.01e-03	-5.85e-04	-2.13e-06
85	21	6.09e-05	6.92e-04	0.02	-1.01e-03	-5.85e-04	-2.13e-06
85	22	6.09e-05	6.92e-04	0.02	-1.01e-03	-5.85e-04	-2.13e-06
86	1	9.81e-04	-6.31e-04	0.04	1.52e-03	8.78e-04	-6.81e-06
86	2	-7.32e-05	-1.87e-05	-7.72e-03	-9.26e-06	-5.18e-06	0.0
86	3	6.44e-04	-4.23e-04	0.02	1.01e-03	5.85e-04	-4.57e-06
86	4	0.14	-9.24e-03	0.02	9.97e-04	6.50e-04	4.91e-04
86	5	-0.14	8.39e-03	0.02	1.03e-03	5.20e-04	-5.00e-04
86	6	0.14	-8.55e-03	0.02	9.95e-04	6.49e-04	-5.49e-04
86	7	-0.14	7.70e-03	0.02	1.03e-03	5.21e-04	5.40e-04
86	8	7.85e-04	0.14	0.02	9.50e-04	5.89e-04	5.51e-04
86	9	5.04e-04	-0.14	0.02	1.08e-03	5.81e-04	-5.60e-04
86	10	-9.44e-03	0.14	0.02	9.47e-04	5.89e-04	-5.01e-04
86	11	0.01	-0.14	0.02	1.08e-03	5.81e-04	4.92e-04
86	12	0.07	-4.64e-03	0.02	1.00e-03	6.17e-04	2.28e-04
86	13	-0.07	3.80e-03	0.02	1.02e-03	5.53e-04	-2.37e-04
86	14	0.07	-4.23e-03	0.02	1.00e-03	6.16e-04	-2.60e-04
86	15	-0.07	3.38e-03	0.02	1.02e-03	5.54e-04	2.51e-04
86	16	7.09e-04	0.07	0.02	9.82e-04	5.87e-04	2.56e-04
86	17	5.80e-04	-0.07	0.02	1.04e-03	5.83e-04	-2.65e-04
86	18	-4.21e-03	0.07	0.02	9.81e-04	5.87e-04	-2.37e-04
86	19	5.50e-03	-0.07	0.02	1.04e-03	5.83e-04	2.28e-04
86	20	6.44e-04	-4.23e-04	0.02	1.01e-03	5.85e-04	-4.57e-06
86	21	6.44e-04	-4.23e-04	0.02	1.01e-03	5.85e-04	-4.57e-06
86	22	6.44e-04	-4.23e-04	0.02	1.01e-03	5.85e-04	-4.57e-06
87	1	4.44e-03	-5.49e-03	-0.03	3.53e-04	2.06e-04	-4.35e-06
87	2	-1.93e-04	1.45e-05	-7.22e-03	1.06e-06	1.72e-06	0.0
87	3	2.94e-03	-3.66e-03	-0.02	2.35e-04	1.37e-04	-2.83e-06
87	4	0.16	-0.04	-0.01	2.42e-04	2.05e-04	5.00e-04
87	5	-0.15	0.03	-0.02	2.29e-04	6.99e-05	-5.06e-04
87	6	0.15	0.03	-0.01	2.42e-04	2.04e-04	-5.53e-04
87	7	-0.14	-0.03	-0.02	2.29e-04	7.13e-05	5.47e-04
87	8	-0.07	0.14	-0.03	1.75e-04	1.39e-04	5.60e-04
87	9	0.07	-0.15	-0.01	2.96e-04	1.36e-04	-5.66e-04
87	10	0.06	0.14	-0.03	1.73e-04	1.42e-04	-5.05e-04

87	11	-0.05	-0.15	-0.01	2.98e-04	1.32e-04	4.99e-04
87	12	0.08	-0.02	-0.02	2.39e-04	1.70e-04	2.33e-04
87	13	-0.07	0.01	-0.02	2.32e-04	1.05e-04	-2.39e-04
87	14	0.07	0.01	-0.02	2.38e-04	1.70e-04	-2.61e-04
87	15	-0.07	-0.02	-0.02	2.33e-04	1.05e-04	2.55e-04
87	16	-0.03	0.07	-0.02	2.06e-04	1.38e-04	2.62e-04
87	17	0.03	-0.07	-0.02	2.65e-04	1.37e-04	-2.67e-04
87	18	0.03	0.06	-0.02	2.05e-04	1.40e-04	-2.38e-04
87	19	-0.02	-0.07	-0.02	2.66e-04	1.35e-04	2.32e-04
87	20	2.94e-03	-3.66e-03	-0.02	2.35e-04	1.37e-04	-2.83e-06
87	21	2.94e-03	-3.66e-03	-0.02	2.35e-04	1.37e-04	-2.83e-06
87	22	2.94e-03	-3.66e-03	-0.02	2.35e-04	1.37e-04	-2.83e-06
88	1	-1.04e-03	3.60e-03	2.67e-03	-1.13e-04	-6.50e-05	-3.84e-06
88	2	-1.07e-04	-6.46e-05	-7.50e-03	0.0	0.0	0.0
88	3	-7.08e-04	2.39e-03	7.77e-04	-7.57e-05	-4.33e-05	-2.48e-06
88	4	0.15	-0.02	3.58e-03	-8.28e-05	2.78e-05	4.94e-04
88	5	-0.15	0.03	-2.03e-03	-6.85e-05	-1.14e-04	-4.99e-04
88	6	0.14	0.02	3.44e-03	-8.04e-05	2.61e-05	-5.47e-04
88	7	-0.14	-0.01	-1.89e-03	-7.09e-05	-1.13e-04	5.43e-04
88	8	-0.04	0.14	-3.99e-03	-1.49e-04	-4.08e-05	5.54e-04
88	9	0.04	-0.14	5.54e-03	-2.05e-06	-4.57e-05	-5.59e-04
88	10	0.03	0.15	-4.17e-03	-1.51e-04	-3.92e-05	-5.00e-04
88	11	-0.03	-0.14	5.73e-03	0.0	-4.73e-05	4.95e-04
88	12	0.07	-8.59e-03	2.13e-03	-7.92e-05	-8.77e-06	2.30e-04
88	13	-0.07	0.01	-5.77e-04	-7.21e-05	-7.78e-05	-2.35e-04
88	14	0.07	0.01	2.07e-03	-7.79e-05	-9.57e-06	-2.58e-04
88	15	-0.07	-5.42e-03	-5.15e-04	-7.34e-05	-7.70e-05	2.53e-04
88	16	-0.02	0.07	-1.53e-03	-1.11e-04	-4.21e-05	2.59e-04
88	17	0.02	-0.07	3.09e-03	-3.99e-05	-4.44e-05	-2.64e-04
88	18	0.02	0.07	-1.61e-03	-1.12e-04	-4.13e-05	-2.36e-04
88	19	-0.02	-0.07	3.17e-03	-3.91e-05	-4.52e-05	2.31e-04
88	20	-7.08e-04	2.39e-03	7.77e-04	-7.57e-05	-4.33e-05	-2.48e-06
88	21	-7.08e-04	2.39e-03	7.77e-04	-7.57e-05	-4.33e-05	-2.48e-06
88	22	-7.08e-04	2.39e-03	7.77e-04	-7.57e-05	-4.33e-05	-2.48e-06
89	1	-0.03	0.05	-0.02	-2.89e-06	2.05e-06	-2.66e-05
89	2	-8.85e-04	6.17e-04	-7.09e-03	-4.40e-06	0.0	-1.34e-05
89	3	-0.02	0.03	-0.01	-2.51e-06	1.43e-06	-1.95e-05
89	4	0.13	-6.79e-03	-7.55e-03	7.88e-06	6.65e-05	4.83e-04
89	5	-0.16	0.07	-0.02	-1.29e-05	-6.37e-05	-5.22e-04
89	6	0.12	0.07	-7.79e-03	7.29e-06	6.58e-05	-5.70e-04
89	7	-0.15	-3.78e-03	-0.02	-1.23e-05	-6.30e-05	5.31e-04
89	8	-0.09	0.16	-0.02	-6.05e-05	-1.16e-06	5.42e-04
89	9	0.06	-0.10	-4.07e-03	5.54e-05	4.02e-06	-5.81e-04
89	10	0.05	0.16	-0.02	-6.31e-05	-4.80e-06	-5.22e-04
89	11	-0.08	-0.09	-3.71e-03	5.81e-05	7.66e-06	4.83e-04
89	12	0.05	0.01	-0.01	2.52e-06	3.29e-05	2.16e-04
89	13	-0.09	0.05	-0.02	-7.54e-06	-3.01e-05	-2.55e-04
89	14	0.05	0.05	-0.01	2.06e-06	3.28e-05	-2.78e-04
89	15	-0.08	0.02	-0.02	-7.08e-06	-3.00e-05	2.39e-04
89	16	-0.05	0.10	-0.02	-3.05e-05	0.0	2.44e-04
89	17	0.02	-0.03	-8.59e-03	2.55e-05	2.69e-06	-2.83e-04
89	18	0.01	0.09	-0.02	-3.19e-05	-1.51e-06	-2.55e-04
89	19	-0.05	-0.03	-8.43e-03	2.69e-05	4.38e-06	2.16e-04
89	20	-0.02	0.03	-0.01	-2.51e-06	1.43e-06	-1.95e-05
89	21	-0.02	0.03	-0.01	-2.51e-06	1.43e-06	-1.95e-05
89	22	-0.02	0.03	-0.01	-2.51e-06	1.43e-06	-1.95e-05
90	1	-3.73e-03	6.61e-03	-6.75e-03	3.46e-04	1.90e-04	-2.10e-05
90	2	-3.81e-04	7.79e-04	-5.54e-03	0.0	1.37e-05	-3.35e-06
90	3	-2.54e-03	4.51e-03	-5.24e-03	2.31e-04	1.29e-04	-1.45e-05
90	4	0.11	0.04	-7.88e-03	3.81e-04	1.60e-04	5.02e-04
90	5	-0.12	-0.03	-2.59e-03	8.13e-05	9.74e-05	-5.31e-04
90	6	0.12	-0.04	-7.70e-03	3.78e-04	1.57e-04	-5.94e-04
90	7	-0.13	0.04	-2.77e-03	8.45e-05	1.00e-04	5.65e-04
90	8	0.06	0.11	1.09e-03	6.23e-05	1.49e-04	5.67e-04
90	9	-0.06	-0.10	-0.01	4.00e-04	1.09e-04	-5.96e-04
90	10	-0.06	0.12	1.36e-03	5.79e-05	1.45e-04	-5.31e-04
90	11	0.06	-0.11	-0.01	4.04e-04	1.13e-04	5.02e-04
90	12	0.05	0.02	-6.52e-03	3.03e-04	1.44e-04	2.26e-04
90	13	-0.06	-0.01	-3.96e-03	1.59e-04	1.13e-04	-2.54e-04
90	14	0.06	-0.01	-6.42e-03	3.03e-04	1.42e-04	-2.89e-04
90	15	-0.06	0.02	-4.05e-03	1.59e-04	1.15e-04	2.60e-04
90	16	0.03	0.06	-2.18e-03	1.49e-04	1.38e-04	2.60e-04
90	17	-0.03	-0.05	-8.29e-03	3.13e-04	1.19e-04	-2.88e-04
90	18	-0.03	0.06	-2.04e-03	1.48e-04	1.36e-04	-2.56e-04
90	19	0.02	-0.05	-8.43e-03	3.14e-04	1.21e-04	2.27e-04
90	20	-2.54e-03	4.51e-03	-5.24e-03	2.31e-04	1.29e-04	-1.45e-05
90	21	-2.54e-03	4.51e-03	-5.24e-03	2.31e-04	1.29e-04	-1.45e-05

90	22	-2.54e-03	4.51e-03	-5.24e-03	2.31e-04	1.29e-04	-1.45e-05
91	1	0.01	-0.02	-0.02	-1.54e-03	-8.91e-04	-1.98e-05
91	2	3.63e-04	-8.10e-04	-6.51e-03	-2.57e-06	-1.52e-06	-2.32e-05
91	3	8.93e-03	-0.02	-0.02	-1.03e-03	-5.94e-04	-1.63e-05
91	4	0.13	0.02	-0.02	-1.02e-03	-4.98e-04	4.83e-04
91	5	-0.11	-0.05	-0.01	-1.04e-03	-6.91e-04	-5.15e-04
91	6	0.14	-0.06	-0.02	-1.02e-03	-4.98e-04	-5.61e-04
91	7	-0.12	0.03	-0.01	-1.04e-03	-6.90e-04	5.28e-04
91	8	0.08	0.10	-7.32e-03	-1.11e-03	-6.04e-04	5.40e-04
91	9	-0.06	-0.13	-0.02	-9.50e-04	-5.85e-04	-5.73e-04
91	10	-0.06	0.10	-6.99e-03	-1.11e-03	-6.08e-04	-5.15e-04
91	11	0.08	-0.14	-0.02	-9.49e-04	-5.81e-04	4.82e-04
91	12	0.07	1.63e-03	-0.02	-1.02e-03	-5.48e-04	2.18e-04
91	13	-0.05	-0.03	-0.01	-1.04e-03	-6.41e-04	-2.51e-04
91	14	0.07	-0.04	-0.02	-1.03e-03	-5.47e-04	-2.71e-04
91	15	-0.06	5.37e-03	-0.01	-1.03e-03	-6.41e-04	2.39e-04
91	16	0.04	0.04	-0.01	-1.07e-03	-5.99e-04	2.45e-04
91	17	-0.02	-0.07	-0.02	-9.91e-04	-5.90e-04	-2.77e-04
91	18	-0.02	0.04	-0.01	-1.07e-03	-6.01e-04	-2.50e-04
91	19	0.04	-0.07	-0.02	-9.91e-04	-5.88e-04	2.18e-04
91	20	8.93e-03	-0.02	-0.02	-1.03e-03	-5.94e-04	-1.63e-05
91	21	8.93e-03	-0.02	-0.02	-1.03e-03	-5.94e-04	-1.63e-05
91	22	8.93e-03	-0.02	-0.02	-1.03e-03	-5.94e-04	-1.63e-05
92	1	4.58e-03	-5.64e-03	-7.95e-03	-3.49e-04	-2.10e-04	-5.80e-06
92	2	-3.28e-05	-1.91e-04	-6.71e-03	4.13e-06	0.0	-3.19e-06
92	3	3.05e-03	-3.79e-03	-6.20e-03	-2.32e-04	-1.40e-04	-4.29e-06
92	4	0.13	-0.04	-1.37e-03	-2.20e-04	-1.02e-04	5.08e-04
92	5	-0.12	0.03	-0.01	-2.45e-04	-1.79e-04	-5.16e-04
92	6	0.12	0.03	-1.58e-03	-2.21e-04	-1.01e-04	-5.58e-04
92	7	-0.11	-0.04	-0.01	-2.43e-04	-1.79e-04	5.49e-04
92	8	-0.06	0.11	-0.01	-2.99e-04	-1.88e-04	5.68e-04
92	9	0.07	-0.11	9.65e-04	-1.66e-04	-9.18e-05	-5.77e-04
92	10	0.06	0.10	-0.01	-3.02e-04	-1.89e-04	-5.09e-04
92	11	-0.05	-0.11	1.29e-03	-1.63e-04	-9.13e-05	5.00e-04
92	12	0.06	-0.02	-3.86e-03	-2.26e-04	-1.22e-04	2.37e-04
92	13	-0.06	0.01	-8.53e-03	-2.38e-04	-1.58e-04	-2.45e-04
92	14	0.06	0.01	-3.96e-03	-2.27e-04	-1.21e-04	-2.63e-04
92	15	-0.05	-0.02	-8.43e-03	-2.38e-04	-1.59e-04	2.55e-04
92	16	-0.03	0.05	-9.66e-03	-2.64e-04	-1.64e-04	2.65e-04
92	17	0.03	-0.06	-2.73e-03	-2.00e-04	-1.16e-04	-2.74e-04
92	18	0.03	0.05	-9.81e-03	-2.66e-04	-1.63e-04	-2.40e-04
92	19	-0.02	-0.06	-2.58e-03	-1.99e-04	-1.17e-04	2.31e-04
92	20	3.05e-03	-3.79e-03	-6.20e-03	-2.32e-04	-1.40e-04	-4.29e-06
92	21	3.05e-03	-3.79e-03	-6.20e-03	-2.32e-04	-1.40e-04	-4.29e-06
92	22	3.05e-03	-3.79e-03	-6.20e-03	-2.32e-04	-1.40e-04	-4.29e-06
93	1	-1.08e-03	3.66e-03	-0.04	1.09e-04	6.77e-05	-6.00e-06
93	2	-1.79e-04	-1.56e-05	-7.31e-03	-7.07e-06	4.15e-06	2.99e-06
93	3	-7.47e-04	2.44e-03	-0.03	7.20e-05	4.57e-05	-3.60e-06
93	4	0.11	-0.02	-0.02	8.14e-05	1.39e-04	4.83e-04
93	5	-0.11	0.02	-0.03	6.25e-05	-4.76e-05	-4.90e-04
93	6	0.10	0.02	-0.02	8.11e-05	1.36e-04	-5.42e-04
93	7	-0.11	-0.02	-0.03	6.28e-05	-4.48e-05	5.35e-04
93	8	-0.04	0.11	-0.03	4.06e-05	9.41e-05	5.42e-04
93	9	0.04	-0.10	-0.02	1.03e-04	-2.66e-06	-5.49e-04
93	10	0.03	0.11	-0.03	3.89e-05	9.28e-05	-4.95e-04
93	11	-0.03	-0.10	-0.02	1.05e-04	-1.37e-06	4.88e-04
93	12	0.05	-7.78e-03	-0.03	7.66e-05	9.12e-05	2.24e-04
93	13	-0.06	0.01	-0.03	6.74e-05	0.0	-2.31e-04
93	14	0.05	0.01	-0.03	7.62e-05	8.95e-05	-2.57e-04
93	15	-0.05	-5.87e-03	-0.03	6.77e-05	1.90e-06	2.50e-04
93	16	-0.02	0.05	-0.03	5.69e-05	6.94e-05	2.52e-04
93	17	0.02	-0.05	-0.02	8.70e-05	2.20e-05	-2.59e-04
93	18	0.02	0.05	-0.03	5.59e-05	6.84e-05	-2.35e-04
93	19	-0.02	-0.05	-0.02	8.80e-05	2.30e-05	2.27e-04
93	20	-7.47e-04	2.44e-03	-0.03	7.20e-05	4.57e-05	-3.60e-06
93	21	-7.47e-04	2.44e-03	-0.03	7.20e-05	4.57e-05	-3.60e-06
93	22	-7.47e-04	2.44e-03	-0.03	7.20e-05	4.57e-05	-3.60e-06
94	1	1.47e-03	4.12e-04	0.04	-4.55e-04	1.70e-03	-3.90e-06
94	2	-8.22e-05	-2.19e-05	-7.72e-03	2.63e-06	-9.81e-06	0.0
94	3	9.67e-04	2.72e-04	0.02	-3.03e-04	1.13e-03	-2.53e-06
94	4	0.14	9.64e-03	0.02	-3.08e-04	1.20e-03	4.94e-04
94	5	-0.14	-9.10e-03	0.02	-2.98e-04	1.06e-03	-4.99e-04
94	6	0.14	-0.01	0.02	-3.05e-04	1.20e-03	-5.47e-04
94	7	-0.14	0.01	0.02	-3.01e-04	1.06e-03	5.42e-04
94	8	-5.21e-03	0.14	0.02	-3.67e-04	1.13e-03	5.53e-04
94	9	7.14e-03	-0.14	0.02	-2.39e-04	1.13e-03	-5.58e-04
94	10	-7.14e-03	0.14	0.02	-3.69e-04	1.13e-03	-4.99e-04

94	11	9.07e-03	-0.14	0.02	-2.37e-04	1.13e-03	4.94e-04
94	12	0.07	4.72e-03	0.02	-3.05e-04	1.16e-03	2.30e-04
94	13	-0.07	-4.18e-03	0.02	-3.00e-04	1.10e-03	-2.35e-04
94	14	0.07	-4.72e-03	0.02	-3.04e-04	1.16e-03	-2.58e-04
94	15	-0.07	5.27e-03	0.02	-3.02e-04	1.10e-03	2.53e-04
94	16	-1.94e-03	0.07	0.02	-3.34e-04	1.13e-03	2.58e-04
94	17	3.87e-03	-0.07	0.02	-2.72e-04	1.13e-03	-2.63e-04
94	18	-2.94e-03	0.07	0.02	-3.35e-04	1.13e-03	-2.35e-04
94	19	4.87e-03	-0.07	0.02	-2.71e-04	1.13e-03	2.30e-04
94	20	9.67e-04	2.72e-04	0.02	-3.03e-04	1.13e-03	-2.53e-06
94	21	9.67e-04	2.72e-04	0.02	-3.03e-04	1.13e-03	-2.53e-06
94	22	9.67e-04	2.72e-04	0.02	-3.03e-04	1.13e-03	-2.53e-06
95	1	-3.80e-04	1.58e-06	0.04	4.54e-04	-1.69e-03	-3.90e-06
95	2	-6.93e-05	-3.04e-05	-7.72e-03	-2.93e-06	1.09e-05	0.0
95	3	-2.62e-04	-3.00e-06	0.02	3.02e-04	-1.13e-03	-2.52e-06
95	4	0.14	-0.01	0.02	2.95e-04	-1.04e-03	4.96e-04
95	5	-0.14	0.01	0.02	3.09e-04	-1.22e-03	-5.01e-04
95	6	0.14	1.09e-03	0.02	2.97e-04	-1.04e-03	-5.49e-04
95	7	-0.14	-1.10e-03	0.02	3.08e-04	-1.22e-03	5.44e-04
95	8	-3.55e-03	0.14	0.02	2.31e-04	-1.13e-03	5.56e-04
95	9	3.02e-03	-0.14	0.02	3.73e-04	-1.13e-03	-5.62e-04
95	10	-8.89e-03	0.14	0.02	2.29e-04	-1.12e-03	-5.01e-04
95	11	8.37e-03	-0.14	0.02	3.75e-04	-1.13e-03	4.96e-04
95	12	0.07	-5.20e-03	0.02	2.98e-04	-1.08e-03	2.31e-04
95	13	-0.07	5.20e-03	0.02	3.06e-04	-1.17e-03	-2.36e-04
95	14	0.07	5.21e-04	0.02	2.99e-04	-1.08e-03	-2.59e-04
95	15	-0.07	-5.27e-04	0.02	3.05e-04	-1.17e-03	2.54e-04
95	16	-1.81e-03	0.07	0.02	2.67e-04	-1.13e-03	2.60e-04
95	17	1.28e-03	-0.07	0.02	3.37e-04	-1.13e-03	-2.65e-04
95	18	-4.43e-03	0.07	0.02	2.67e-04	-1.12e-03	-2.36e-04
95	19	3.90e-03	-0.07	0.02	3.37e-04	-1.13e-03	2.31e-04
95	20	-2.62e-04	-3.00e-06	0.02	3.02e-04	-1.13e-03	-2.52e-06
95	21	-2.62e-04	-3.00e-06	0.02	3.02e-04	-1.13e-03	-2.52e-06
95	22	-2.62e-04	-3.00e-06	0.02	3.02e-04	-1.13e-03	-2.52e-06
96	1	0.01	-0.02	-0.01	1.55e-03	9.09e-04	4.63e-06
96	2	-6.17e-05	8.11e-05	-7.33e-03	2.20e-05	1.98e-05	5.23e-06
96	3	8.62e-03	-0.02	-9.69e-03	1.04e-03	6.08e-04	3.79e-06
96	4	0.15	0.02	-0.02	1.07e-03	7.13e-04	5.02e-04
96	5	-0.14	-0.05	-4.31e-03	1.01e-03	5.04e-04	-4.95e-04
96	6	0.17	-0.06	-0.01	1.07e-03	7.13e-04	-5.42e-04
96	7	-0.15	0.03	-4.53e-03	1.01e-03	5.04e-04	5.49e-04
96	8	0.08	0.12	-8.49e-04	9.54e-04	5.94e-04	5.62e-04
96	9	-0.06	-0.15	-0.02	1.12e-03	6.22e-04	-5.54e-04
96	10	-0.06	0.13	-4.65e-04	9.51e-04	5.91e-04	-4.94e-04
96	11	0.08	-0.16	-0.02	1.13e-03	6.26e-04	5.02e-04
96	12	0.08	2.28e-03	-0.01	1.05e-03	6.59e-04	2.38e-04
96	13	-0.06	-0.03	-7.09e-03	1.02e-03	5.58e-04	-2.30e-04
96	14	0.09	-0.04	-0.01	1.05e-03	6.60e-04	-2.52e-04
96	15	-0.07	6.69e-03	-7.19e-03	1.02e-03	5.57e-04	2.60e-04
96	16	0.04	0.05	-5.41e-03	9.97e-04	6.01e-04	2.66e-04
96	17	-0.02	-0.08	-0.01	1.08e-03	6.15e-04	-2.58e-04
96	18	-0.02	0.06	-5.23e-03	9.96e-04	6.00e-04	-2.30e-04
96	19	0.04	-0.09	-0.01	1.08e-03	6.17e-04	2.37e-04
96	20	8.62e-03	-0.02	-9.69e-03	1.04e-03	6.08e-04	3.79e-06
96	21	8.62e-03	-0.02	-9.69e-03	1.04e-03	6.08e-04	3.79e-06
96	22	8.62e-03	-0.02	-9.69e-03	1.04e-03	6.08e-04	3.79e-06
97	1	2.14e-03	-3.33e-03	-0.04	-9.65e-05	-4.28e-05	3.06e-06
97	2	-4.92e-05	-8.70e-05	-7.65e-03	9.66e-06	1.35e-05	-7.73e-06
97	3	1.42e-03	-2.23e-03	-0.03	-6.31e-05	-2.67e-05	1.01e-06
97	4	0.11	0.02	-0.03	-2.26e-04	-7.85e-05	4.85e-04
97	5	-0.10	-0.02	-0.02	9.98e-05	2.51e-05	-4.83e-04
97	6	0.11	-0.03	-0.03	-2.24e-04	-7.72e-05	-5.27e-04
97	7	-0.11	0.02	-0.02	9.81e-05	2.38e-05	5.29e-04
97	8	0.04	0.10	-0.02	-8.57e-06	6.50e-05	5.44e-04
97	9	-0.03	-0.10	-0.03	-1.18e-04	-1.18e-04	-5.42e-04
97	10	-0.03	0.11	-0.02	-5.31e-06	6.68e-05	-4.80e-04
97	11	0.04	-0.11	-0.03	-1.21e-04	-1.20e-04	4.82e-04
97	12	0.05	7.21e-03	-0.03	-1.42e-04	-5.14e-05	2.28e-04
97	13	-0.05	-0.01	-0.03	1.55e-05	-2.01e-06	-2.26e-04
97	14	0.06	-0.01	-0.03	-1.42e-04	-5.14e-05	-2.46e-04
97	15	-0.05	9.97e-03	-0.03	1.56e-05	-1.97e-06	2.48e-04
97	16	0.02	0.05	-0.02	-3.64e-05	1.80e-05	2.57e-04
97	17	-0.01	-0.05	-0.03	-8.98e-05	-7.14e-05	-2.55e-04
97	18	-0.02	0.05	-0.02	-3.57e-05	1.82e-05	-2.24e-04
97	19	0.02	-0.06	-0.03	-9.04e-05	-7.16e-05	2.26e-04
97	20	1.42e-03	-2.23e-03	-0.03	-6.31e-05	-2.67e-05	1.01e-06
97	21	1.42e-03	-2.23e-03	-0.03	-6.31e-05	-2.67e-05	1.01e-06

97	22	1.42e-03	-2.23e-03	-0.03	-6.31e-05	-2.67e-05	1.01e-06
98	1	-3.38e-03	5.92e-03	-0.03	-3.61e-04	-2.05e-04	-3.06e-06
98	2	2.85e-05	-6.31e-05	-7.24e-03	-4.99e-06	-1.51e-06	0.0
98	3	-2.25e-03	3.94e-03	-0.02	-2.41e-04	-1.37e-04	-1.95e-06
98	4	0.14	0.04	-0.02	-2.66e-04	-8.54e-05	4.99e-04
98	5	-0.15	-0.03	-0.01	-2.17e-04	-1.89e-04	-5.03e-04
98	6	0.15	-0.04	-0.02	-2.68e-04	-8.74e-05	-5.52e-04
98	7	-0.16	0.05	-0.01	-2.15e-04	-1.87e-04	5.48e-04
98	8	0.06	0.14	-0.01	-2.96e-04	-1.26e-04	5.60e-04
98	9	-0.06	-0.14	-0.03	-1.87e-04	-1.48e-04	-5.64e-04
98	10	-0.06	0.15	-0.01	-2.99e-04	-1.29e-04	-5.04e-04
98	11	0.06	-0.14	-0.03	-1.84e-04	-1.45e-04	5.00e-04
98	12	0.07	0.02	-0.02	-2.53e-04	-1.12e-04	2.33e-04
98	13	-0.07	-0.01	-0.02	-2.29e-04	-1.62e-04	-2.37e-04
98	14	0.07	-0.02	-0.02	-2.54e-04	-1.13e-04	-2.61e-04
98	15	-0.08	0.02	-0.02	-2.29e-04	-1.61e-04	2.57e-04
98	16	0.03	0.07	-0.02	-2.68e-04	-1.32e-04	2.62e-04
98	17	-0.03	-0.06	-0.02	-2.15e-04	-1.43e-04	-2.66e-04
98	18	-0.03	0.08	-0.02	-2.69e-04	-1.33e-04	-2.37e-04
98	19	0.03	-0.07	-0.02	-2.14e-04	-1.41e-04	2.33e-04
98	20	-2.25e-03	3.94e-03	-0.02	-2.41e-04	-1.37e-04	-1.95e-06
98	21	-2.25e-03	3.94e-03	-0.02	-2.41e-04	-1.37e-04	-1.95e-06
98	22	-2.25e-03	3.94e-03	-0.02	-2.41e-04	-1.37e-04	-1.95e-06
99	1	2.13e-03	-3.19e-03	2.65e-03	1.10e-04	6.52e-05	-5.06e-06
99	2	-4.51e-05	1.32e-05	-7.51e-03	-1.17e-06	0.0	0.0
99	3	1.41e-03	-2.12e-03	7.66e-04	7.30e-05	4.34e-05	-3.33e-06
99	4	0.14	0.02	-2.19e-03	9.60e-05	1.24e-04	4.94e-04
99	5	-0.14	-0.02	3.72e-03	5.00e-05	-3.66e-05	-5.01e-04
99	6	0.15	-0.03	-2.06e-03	9.42e-05	1.22e-04	-5.48e-04
99	7	-0.14	0.03	3.59e-03	5.17e-05	-3.55e-05	5.41e-04
99	8	0.04	0.14	5.53e-03	-6.04e-06	3.99e-05	5.53e-04
99	9	-0.03	-0.14	-4.00e-03	1.52e-04	4.70e-05	-5.60e-04
99	10	-0.04	0.14	5.73e-03	-7.93e-06	3.60e-05	-5.00e-04
99	11	0.04	-0.15	-4.20e-03	1.54e-04	5.09e-05	4.94e-04
99	12	0.07	7.42e-03	-6.59e-04	8.39e-05	8.22e-05	2.30e-04
99	13	-0.07	-0.01	2.19e-03	6.20e-05	4.68e-06	-2.37e-04
99	14	0.07	-0.01	-6.04e-04	8.34e-05	8.19e-05	-2.59e-04
99	15	-0.07	0.01	2.14e-03	6.26e-05	5.01e-06	2.52e-04
99	16	0.02	0.06	3.08e-03	3.45e-05	4.17e-05	2.58e-04
99	17	-0.01	-0.07	-1.54e-03	1.11e-04	4.52e-05	-2.65e-04
99	18	-0.02	0.07	3.17e-03	3.40e-05	3.99e-05	-2.36e-04
99	19	0.02	-0.07	-1.63e-03	1.12e-04	4.69e-05	2.30e-04
99	20	1.41e-03	-2.12e-03	7.66e-04	7.30e-05	4.34e-05	-3.33e-06
99	21	1.41e-03	-2.12e-03	7.66e-04	7.30e-05	4.34e-05	-3.33e-06
99	22	1.41e-03	-2.12e-03	7.66e-04	7.30e-05	4.34e-05	-3.33e-06
100	1	0.03	-0.05	-0.02	1.56e-05	2.61e-05	2.77e-05
100	2	-6.72e-04	5.72e-04	-7.10e-03	2.05e-05	2.09e-05	1.93e-05
100	3	0.02	-0.03	-0.01	1.32e-05	2.02e-05	2.10e-05
100	4	0.15	6.68e-03	-0.02	-1.20e-05	6.25e-05	5.16e-04
100	5	-0.11	-0.07	-7.62e-03	3.83e-05	-2.20e-05	-4.74e-04
100	6	0.16	-0.08	-0.02	-1.33e-05	5.98e-05	-5.24e-04
100	7	-0.13	0.02	-7.86e-03	3.96e-05	-1.94e-05	5.66e-04
100	8	0.09	0.09	-4.13e-03	-4.07e-05	3.60e-05	5.79e-04
100	9	-0.05	-0.16	-0.02	6.71e-05	4.43e-06	-5.37e-04
100	10	-0.05	0.10	-3.77e-03	-4.29e-05	3.25e-05	-4.73e-04
100	11	0.08	-0.16	-0.02	6.92e-05	7.96e-06	5.15e-04
100	12	0.08	-0.01	-0.02	1.01e-06	4.09e-05	2.53e-04
100	13	-0.04	-0.05	-0.01	2.53e-05	0.0	-2.11e-04
100	14	0.09	-0.05	-0.02	0.0	3.91e-05	-2.35e-04
100	15	-0.05	-8.83e-03	-0.01	2.62e-05	1.30e-06	2.77e-04
100	16	0.05	0.03	-8.64e-03	-1.29e-05	2.79e-05	2.83e-04
100	17	-0.01	-0.09	-0.02	3.92e-05	1.25e-05	-2.41e-04
100	18	-0.01	0.03	-8.48e-03	-1.41e-05	2.59e-05	-2.10e-04
100	19	0.05	-0.10	-0.02	4.04e-05	1.46e-05	2.52e-04
100	20	0.02	-0.03	-0.01	1.32e-05	2.02e-05	2.10e-05
100	21	0.02	-0.03	-0.01	1.32e-05	2.02e-05	2.10e-05
100	22	0.02	-0.03	-0.01	1.32e-05	2.02e-05	2.10e-05
101	1	7.73e-04	-7.29e-04	-0.07	-1.73e-03	-4.62e-04	-2.35e-06
101	2	-7.55e-05	-3.46e-05	-7.33e-03	-1.42e-05	-4.89e-06	-7.69e-06
101	3	5.05e-04	-4.90e-04	-0.05	-1.15e-03	-3.09e-04	-2.59e-06
101	4	0.10	-6.91e-03	-0.05	-1.10e-03	-9.50e-05	4.88e-04
101	5	-0.10	5.92e-03	-0.05	-1.21e-03	-5.22e-04	-4.93e-04
101	6	0.10	-6.10e-03	-0.05	-1.10e-03	-1.00e-04	-5.36e-04
101	7	-0.10	5.12e-03	-0.05	-1.21e-03	-5.17e-04	5.30e-04
101	8	2.31e-03	0.10	-0.05	-1.27e-03	-3.78e-04	5.43e-04
101	9	-1.30e-03	-0.10	-0.05	-1.04e-03	-2.39e-04	-5.48e-04
101	10	-7.76e-03	0.10	-0.05	-1.27e-03	-3.83e-04	-4.92e-04

101	11	8.77e-03	-0.10	-0.05	-1.04e-03	-2.34e-04	4.87e-04
101	12	0.05	-3.56e-03	-0.05	-1.13e-03	-2.05e-04	2.28e-04
101	13	-0.05	2.58e-03	-0.05	-1.18e-03	-4.12e-04	-2.33e-04
101	14	0.05	-3.11e-03	-0.05	-1.13e-03	-2.07e-04	-2.52e-04
101	15	-0.05	2.13e-03	-0.05	-1.18e-03	-4.10e-04	2.47e-04
101	16	1.35e-03	0.05	-0.05	-1.21e-03	-3.42e-04	2.53e-04
101	17	-3.45e-04	-0.05	-0.05	-1.10e-03	-2.75e-04	-2.58e-04
101	18	-3.45e-03	0.05	-0.05	-1.21e-03	-3.45e-04	-2.33e-04
101	19	4.46e-03	-0.05	-0.05	-1.10e-03	-2.73e-04	2.27e-04
101	20	5.05e-04	-4.90e-04	-0.05	-1.15e-03	-3.09e-04	-2.59e-06
101	21	5.05e-04	-4.90e-04	-0.05	-1.15e-03	-3.09e-04	-2.59e-06
101	22	5.05e-04	-4.90e-04	-0.05	-1.15e-03	-3.09e-04	-2.59e-06
102	1	3.54e-04	1.15e-03	-0.07	1.73e-03	4.64e-04	-5.48e-06
102	2	-9.11e-05	-2.13e-05	-7.33e-03	1.48e-05	2.88e-06	8.81e-06
102	3	2.24e-04	7.64e-04	-0.05	1.15e-03	3.10e-04	-2.48e-06
102	4	0.10	-5.94e-03	-0.05	1.08e-03	4.48e-04	4.80e-04
102	5	-0.10	7.46e-03	-0.05	1.22e-03	1.71e-04	-4.85e-04
102	6	0.10	-2.07e-03	-0.05	1.09e-03	4.46e-04	-5.36e-04
102	7	-0.10	3.60e-03	-0.05	1.22e-03	1.74e-04	5.31e-04
102	8	-8.75e-03	0.10	-0.05	9.62e-04	3.88e-04	5.39e-04
102	9	9.20e-03	-0.10	-0.05	1.34e-03	2.31e-04	-5.44e-04
102	10	7.20e-03	0.10	-0.05	9.59e-04	3.89e-04	-4.92e-04
102	11	-6.75e-03	-0.10	-0.05	1.35e-03	2.30e-04	4.87e-04
102	12	0.05	-2.46e-03	-0.05	1.12e-03	3.77e-04	2.24e-04
102	13	-0.05	3.99e-03	-0.05	1.19e-03	2.42e-04	-2.29e-04
102	14	0.05	-5.56e-04	-0.05	1.12e-03	3.76e-04	-2.53e-04
102	15	-0.05	2.08e-03	-0.05	1.19e-03	2.43e-04	2.48e-04
102	16	-3.99e-03	0.05	-0.05	1.06e-03	3.48e-04	2.51e-04
102	17	4.43e-03	-0.05	-0.05	1.25e-03	2.71e-04	-2.56e-04
102	18	3.52e-03	0.05	-0.05	1.06e-03	3.48e-04	-2.33e-04
102	19	-3.08e-03	-0.05	-0.05	1.25e-03	2.71e-04	2.28e-04
102	20	2.24e-04	7.64e-04	-0.05	1.15e-03	3.10e-04	-2.48e-06
102	21	2.24e-04	7.64e-04	-0.05	1.15e-03	3.10e-04	-2.48e-06
102	22	2.24e-04	7.64e-04	-0.05	1.15e-03	3.10e-04	-2.48e-06
103	1	-5.88e-03	0.03	-0.02	1.70e-03	4.55e-04	6.68e-06
103	2	-3.66e-04	3.74e-04	-6.79e-03	-6.68e-06	-2.40e-06	1.53e-05
103	3	-3.97e-03	0.02	-0.02	1.13e-03	3.03e-04	6.50e-06
103	4	0.13	-3.96e-03	-0.01	1.14e-03	3.55e-04	5.03e-04
103	5	-0.14	0.04	-0.02	1.13e-03	2.51e-04	-4.90e-04
103	6	0.12	0.03	-0.01	1.14e-03	3.56e-04	-5.39e-04
103	7	-0.13	4.15e-04	-0.02	1.13e-03	2.50e-04	5.52e-04
103	8	-0.09	0.13	-0.03	1.06e-03	2.82e-04	5.62e-04
103	9	0.08	-0.09	-6.58e-03	1.21e-03	3.25e-04	-5.49e-04
103	10	0.07	0.13	-0.03	1.05e-03	2.80e-04	-4.92e-04
103	11	-0.08	-0.09	-6.22e-03	1.22e-03	3.26e-04	5.05e-04
103	12	0.06	7.27e-03	-0.01	1.14e-03	3.28e-04	2.39e-04
103	13	-0.07	0.03	-0.02	1.13e-03	2.78e-04	-2.26e-04
103	14	0.06	0.03	-0.01	1.14e-03	3.29e-04	-2.50e-04
103	15	-0.06	9.41e-03	-0.02	1.13e-03	2.77e-04	2.63e-04
103	16	-0.04	0.07	-0.02	1.10e-03	2.93e-04	2.67e-04
103	17	0.04	-0.04	-0.01	1.17e-03	3.14e-04	-2.54e-04
103	18	0.03	0.07	-0.02	1.10e-03	2.92e-04	-2.27e-04
103	19	-0.04	-0.04	-0.01	1.17e-03	3.14e-04	2.40e-04
103	20	-3.97e-03	0.02	-0.02	1.13e-03	3.03e-04	6.50e-06
103	21	-3.97e-03	0.02	-0.02	1.13e-03	3.03e-04	6.50e-06
103	22	-3.97e-03	0.02	-0.02	1.13e-03	3.03e-04	6.50e-06
104	1	-5.67e-03	0.03	-0.01	-1.73e-03	-4.53e-04	-9.93e-06
104	2	-1.99e-04	-3.34e-05	-7.26e-03	-1.58e-05	2.25e-06	-3.43e-06
104	3	-3.81e-03	0.02	-9.60e-03	-1.15e-03	-3.02e-04	-7.08e-06
104	4	0.16	-5.36e-03	-6.87e-03	-1.17e-03	-2.48e-04	4.93e-04
104	5	-0.17	0.04	-0.01	-1.14e-03	-3.55e-04	-5.08e-04
104	6	0.15	0.03	-7.11e-03	-1.16e-03	-2.48e-04	-5.55e-04
104	7	-0.15	9.49e-04	-0.01	-1.14e-03	-3.55e-04	5.41e-04
104	8	-0.09	0.15	-0.02	-1.24e-03	-3.17e-04	5.53e-04
104	9	0.08	-0.12	2.99e-04	-1.07e-03	-2.87e-04	-5.67e-04
104	10	0.07	0.16	-0.02	-1.24e-03	-3.17e-04	-5.07e-04
104	11	-0.07	-0.12	6.39e-04	-1.07e-03	-2.86e-04	4.93e-04
104	12	0.08	6.40e-03	-8.29e-03	-1.16e-03	-2.76e-04	2.28e-04
104	13	-0.08	0.03	-0.01	-1.15e-03	-3.27e-04	-2.42e-04
104	14	0.07	0.02	-8.40e-03	-1.16e-03	-2.76e-04	-2.64e-04
104	15	-0.07	9.46e-03	-0.01	-1.15e-03	-3.28e-04	2.50e-04
104	16	-0.04	0.08	-0.01	-1.19e-03	-3.09e-04	2.56e-04
104	17	0.04	-0.05	-4.80e-03	-1.11e-03	-2.94e-04	-2.70e-04
104	18	0.03	0.08	-0.01	-1.19e-03	-3.09e-04	-2.41e-04
104	19	-0.04	-0.05	-4.65e-03	-1.11e-03	-2.95e-04	2.27e-04
104	20	-3.81e-03	0.02	-9.60e-03	-1.15e-03	-3.02e-04	-7.08e-06
104	21	-3.81e-03	0.02	-9.60e-03	-1.15e-03	-3.02e-04	-7.08e-06

104	22	-3.81e-03	0.02	-9.60e-03	-1.15e-03	-3.02e-04	-7.08e-06
105	1	3.39e-04	1.13e-03	0.04	-1.70e-03	-4.55e-04	-1.93e-06
105	2	-7.99e-05	-3.27e-05	-7.72e-03	9.58e-06	2.69e-06	1.10e-06
105	3	2.15e-04	7.49e-04	0.02	-1.13e-03	-3.03e-04	-1.14e-06
105	4	0.14	-8.44e-03	0.02	-1.12e-03	-2.30e-04	4.95e-04
105	5	-0.14	9.93e-03	0.02	-1.14e-03	-3.75e-04	-4.98e-04
105	6	0.14	-3.30e-03	0.02	-1.12e-03	-2.33e-04	-5.45e-04
105	7	-0.14	4.80e-03	0.02	-1.14e-03	-3.73e-04	5.43e-04
105	8	-9.91e-03	0.14	0.02	-1.19e-03	-3.07e-04	5.55e-04
105	9	0.01	-0.14	0.02	-1.07e-03	-2.99e-04	-5.57e-04
105	10	8.90e-03	0.14	0.02	-1.19e-03	-2.99e-04	-4.97e-04
105	11	-8.47e-03	-0.14	0.02	-1.07e-03	-3.07e-04	4.95e-04
105	12	0.07	-3.68e-03	0.02	-1.13e-03	-2.68e-04	2.32e-04
105	13	-0.07	5.18e-03	0.02	-1.13e-03	-3.38e-04	-2.34e-04
105	14	0.07	-1.15e-03	0.02	-1.13e-03	-2.69e-04	-2.56e-04
105	15	-0.07	2.65e-03	0.02	-1.13e-03	-3.37e-04	2.54e-04
105	16	-4.54e-03	0.07	0.02	-1.16e-03	-3.05e-04	2.60e-04
105	17	4.97e-03	-0.07	0.02	-1.10e-03	-3.01e-04	-2.62e-04
105	18	4.35e-03	0.07	0.02	-1.16e-03	-3.01e-04	-2.34e-04
105	19	-3.92e-03	-0.07	0.02	-1.10e-03	-3.05e-04	2.31e-04
105	20	2.15e-04	7.49e-04	0.02	-1.13e-03	-3.03e-04	-1.14e-06
105	21	2.15e-04	7.49e-04	0.02	-1.13e-03	-3.03e-04	-1.14e-06
105	22	2.15e-04	7.49e-04	0.02	-1.13e-03	-3.03e-04	-1.14e-06
106	1	7.49e-04	-7.16e-04	0.04	1.70e-03	4.55e-04	-5.83e-06
106	2	-7.14e-05	-1.95e-05	-7.72e-03	-9.64e-06	-2.46e-06	0.0
106	3	4.90e-04	-4.80e-04	0.02	1.13e-03	3.03e-04	-3.88e-06
106	4	0.14	-9.24e-03	0.02	1.12e-03	3.69e-04	4.91e-04
106	5	-0.14	8.28e-03	0.02	1.14e-03	2.37e-04	-4.99e-04
106	6	0.14	-7.30e-03	0.02	1.12e-03	3.68e-04	-5.47e-04
106	7	-0.14	6.34e-03	0.02	1.14e-03	2.38e-04	5.39e-04
106	8	1.16e-03	0.14	0.02	1.06e-03	3.07e-04	5.51e-04
106	9	-1.84e-04	-0.14	0.02	1.20e-03	3.00e-04	-5.59e-04
106	10	-9.90e-03	0.14	0.02	1.06e-03	3.07e-04	-4.99e-04
106	11	0.01	-0.14	0.02	1.20e-03	2.99e-04	4.91e-04
106	12	0.07	-4.69e-03	0.02	1.13e-03	3.35e-04	2.28e-04
106	13	-0.07	3.73e-03	0.02	1.14e-03	2.71e-04	-2.36e-04
106	14	0.07	-3.68e-03	0.02	1.13e-03	3.35e-04	-2.59e-04
106	15	-0.07	2.72e-03	0.02	1.14e-03	2.72e-04	2.51e-04
106	16	8.04e-04	0.07	0.02	1.10e-03	3.05e-04	2.57e-04
106	17	1.76e-04	-0.07	0.02	1.16e-03	3.01e-04	-2.64e-04
106	18	-4.51e-03	0.07	0.02	1.10e-03	3.05e-04	-2.36e-04
106	19	5.49e-03	-0.07	0.02	1.16e-03	3.01e-04	2.28e-04
106	20	4.90e-04	-4.80e-04	0.02	1.13e-03	3.03e-04	-3.88e-06
106	21	4.90e-04	-4.80e-04	0.02	1.13e-03	3.03e-04	-3.88e-06
106	22	4.90e-04	-4.80e-04	0.02	1.13e-03	3.03e-04	-3.88e-06
107	1	2.84e-03	-6.33e-03	-0.03	3.93e-04	1.08e-04	-5.04e-06
107	2	-1.78e-04	3.41e-05	-7.24e-03	0.0	1.81e-06	0.0
107	3	1.87e-03	-4.21e-03	-0.02	2.62e-04	7.24e-05	-3.31e-06
107	4	0.16	-0.02	-0.02	2.70e-04	1.51e-04	4.92e-04
107	5	-0.16	0.02	-0.02	2.54e-04	-6.56e-06	-4.98e-04
107	6	0.15	9.17e-03	-0.02	2.69e-04	1.49e-04	-5.47e-04
107	7	-0.15	-0.02	-0.02	2.55e-04	-3.84e-06	5.41e-04
107	8	-0.07	0.14	-0.03	2.06e-04	8.29e-05	5.51e-04
107	9	0.08	-0.14	-0.01	3.18e-04	6.19e-05	-5.58e-04
107	10	0.06	0.14	-0.03	2.04e-04	8.09e-05	-5.00e-04
107	11	-0.06	-0.15	-0.01	3.20e-04	6.40e-05	4.93e-04
107	12	0.08	-0.01	-0.02	2.66e-04	1.11e-04	2.29e-04
107	13	-0.08	5.44e-03	-0.02	2.58e-04	3.40e-05	-2.35e-04
107	14	0.07	2.08e-03	-0.02	2.65e-04	1.09e-04	-2.59e-04
107	15	-0.07	-0.01	-0.02	2.59e-04	3.55e-05	2.52e-04
107	16	-0.03	0.06	-0.02	2.35e-04	7.76e-05	2.57e-04
107	17	0.04	-0.07	-0.02	2.89e-04	6.73e-05	-2.63e-04
107	18	0.03	0.06	-0.02	2.34e-04	7.65e-05	-2.36e-04
107	19	-0.03	-0.07	-0.02	2.90e-04	6.84e-05	2.30e-04
107	20	1.87e-03	-4.21e-03	-0.02	2.62e-04	7.24e-05	-3.31e-06
107	21	1.87e-03	-4.21e-03	-0.02	2.62e-04	7.24e-05	-3.31e-06
107	22	1.87e-03	-4.21e-03	-0.02	2.62e-04	7.24e-05	-3.31e-06
108	1	-1.07e-04	3.89e-03	2.66e-03	-1.27e-04	-3.31e-05	-3.38e-06
108	2	-1.16e-04	-5.62e-05	-7.51e-03	0.0	0.0	0.0
108	3	-8.70e-05	2.59e-03	7.70e-04	-8.47e-05	-2.20e-05	-2.15e-06
108	4	0.15	-0.01	2.20e-03	-9.51e-05	4.67e-05	5.00e-04
108	5	-0.15	0.02	-6.61e-04	-7.44e-05	-9.06e-05	-5.04e-04
108	6	0.14	8.71e-03	2.07e-03	-9.29e-05	4.52e-05	-5.52e-04
108	7	-0.14	-3.54e-03	-5.29e-04	-7.65e-05	-8.91e-05	5.47e-04
108	8	-0.05	0.14	-4.61e-03	-1.63e-04	-2.25e-05	5.60e-04
108	9	0.05	-0.14	6.15e-03	-6.46e-06	-2.15e-05	-5.64e-04
108	10	0.04	0.15	-4.79e-03	-1.65e-04	-2.66e-05	-5.03e-04

108	11	-0.04	-0.14	6.33e-03	-4.47e-06	-1.74e-05	4.99e-04
108	12	0.07	-4.43e-03	1.46e-03	-8.99e-05	1.13e-05	2.33e-04
108	13	-0.07	9.61e-03	8.28e-05	-7.96e-05	-5.52e-05	-2.38e-04
108	14	0.07	5.47e-03	1.40e-03	-8.87e-05	1.07e-05	-2.60e-04
108	15	-0.07	-2.98e-04	1.42e-04	-8.08e-05	-5.46e-05	2.56e-04
108	16	-0.02	0.07	-1.84e-03	-1.23e-04	-2.22e-05	2.62e-04
108	17	0.02	-0.07	3.38e-03	-4.67e-05	-2.17e-05	-2.66e-04
108	18	0.02	0.07	-1.92e-03	-1.24e-04	-2.42e-05	-2.37e-04
108	19	-0.02	-0.07	3.46e-03	-4.60e-05	-1.98e-05	2.33e-04
108	20	-8.70e-05	2.59e-03	7.70e-04	-8.47e-05	-2.20e-05	-2.15e-06
108	21	-8.70e-05	2.59e-03	7.70e-04	-8.47e-05	-2.20e-05	-2.15e-06
108	22	-8.70e-05	2.59e-03	7.70e-04	-8.47e-05	-2.20e-05	-2.15e-06
109	1	-0.01	0.05	-0.02	-1.10e-05	5.38e-06	-4.17e-05
109	2	-5.96e-04	-4.91e-05	-7.09e-03	-1.36e-05	2.15e-06	-2.11e-05
109	3	-9.09e-03	0.03	-0.01	-9.14e-06	3.87e-06	-3.06e-05
109	4	0.14	0.01	-0.01	-1.79e-06	9.54e-05	4.69e-04
109	5	-0.16	0.06	-0.02	-1.65e-05	-8.77e-05	-5.31e-04
109	6	0.13	0.05	-0.01	-2.87e-06	9.19e-05	-5.77e-04
109	7	-0.15	0.02	-0.02	-1.54e-05	-8.42e-05	5.16e-04
109	8	-0.09	0.16	-0.02	-6.47e-05	2.49e-05	5.28e-04
109	9	0.08	-0.09	-3.06e-03	4.64e-05	-1.72e-05	-5.89e-04
109	10	0.06	0.16	-0.02	-6.68e-05	2.12e-05	-5.30e-04
109	11	-0.08	-0.09	-2.71e-03	4.86e-05	-1.34e-05	4.68e-04
109	12	0.06	0.02	-0.01	-5.62e-06	4.85e-05	2.04e-04
109	13	-0.08	0.05	-0.01	-1.27e-05	-4.08e-05	-2.65e-04
109	14	0.06	0.04	-0.01	-6.19e-06	4.64e-05	-2.87e-04
109	15	-0.07	0.03	-0.01	-1.21e-05	-3.86e-05	2.26e-04
109	16	-0.05	0.10	-0.02	-3.60e-05	1.42e-05	2.32e-04
109	17	0.03	-0.03	-8.11e-03	1.78e-05	-6.48e-06	-2.93e-04
109	18	0.02	0.09	-0.02	-3.71e-05	1.21e-05	-2.64e-04
109	19	-0.04	-0.02	-7.95e-03	1.88e-05	-4.33e-06	2.03e-04
109	20	-9.09e-03	0.03	-0.01	-9.14e-06	3.87e-06	-3.06e-05
109	21	-9.09e-03	0.03	-0.01	-9.14e-06	3.87e-06	-3.06e-05
109	22	-9.09e-03	0.03	-0.01	-9.14e-06	3.87e-06	-3.06e-05
110	1	-1.79e-03	7.11e-03	-7.55e-03	3.96e-04	9.28e-05	-3.99e-06
110	2	-3.21e-05	3.52e-04	-6.35e-03	-3.98e-06	-2.24e-06	5.43e-06
110	3	-1.20e-03	4.78e-03	-5.88e-03	2.63e-04	6.16e-05	-1.93e-06
110	4	0.12	0.02	-7.55e-03	2.92e-04	1.69e-04	4.89e-04
110	5	-0.12	-0.01	-4.22e-03	2.35e-04	-4.60e-05	-4.93e-04
110	6	0.13	-0.02	-7.36e-03	2.90e-04	1.68e-04	-5.33e-04
110	7	-0.13	0.03	-4.41e-03	2.37e-04	-4.53e-05	5.30e-04
110	8	0.07	0.11	2.12e-03	1.67e-04	4.59e-05	5.43e-04
110	9	-0.07	-0.10	-0.01	3.60e-04	7.72e-05	-5.47e-04
110	10	-0.07	0.11	2.41e-03	1.64e-04	4.28e-05	-4.89e-04
110	11	0.06	-0.10	-0.01	3.63e-04	8.03e-05	4.85e-04
110	12	0.05	0.01	-6.68e-03	2.77e-04	1.13e-04	2.29e-04
110	13	-0.06	-3.30e-03	-5.08e-03	2.49e-04	9.67e-06	-2.33e-04
110	14	0.06	-5.91e-03	-6.59e-03	2.76e-04	1.14e-04	-2.51e-04
110	15	-0.06	0.02	-5.18e-03	2.51e-04	9.39e-06	2.47e-04
110	16	0.03	0.05	-2.01e-03	2.17e-04	5.39e-05	2.54e-04
110	17	-0.03	-0.04	-9.76e-03	3.10e-04	6.92e-05	-2.58e-04
110	18	-0.03	0.06	-1.87e-03	2.15e-04	5.28e-05	-2.30e-04
110	19	0.03	-0.05	-9.90e-03	3.11e-04	7.03e-05	2.26e-04
110	20	-1.20e-03	4.78e-03	-5.88e-03	2.63e-04	6.16e-05	-1.93e-06
110	21	-1.20e-03	4.78e-03	-5.88e-03	2.63e-04	6.16e-05	-1.93e-06
110	22	-1.20e-03	4.78e-03	-5.88e-03	2.63e-04	6.16e-05	-1.93e-06
111	1	6.69e-03	-0.03	-0.02	-1.70e-03	-4.57e-04	-1.48e-05
111	2	4.12e-05	-4.72e-04	-6.79e-03	6.99e-06	1.26e-06	-1.42e-05
111	3	4.47e-03	-0.02	-0.02	-1.13e-03	-3.05e-04	-1.18e-05
111	4	0.13	2.51e-03	-0.02	-1.12e-03	-2.53e-04	4.85e-04
111	5	-0.12	-0.04	-0.01	-1.15e-03	-3.57e-04	-5.09e-04
111	6	0.14	-0.04	-0.02	-1.12e-03	-2.55e-04	-5.56e-04
111	7	-0.13	8.23e-03	-0.01	-1.15e-03	-3.54e-04	5.32e-04
111	8	0.08	0.09	-6.39e-03	-1.22e-03	-2.95e-04	5.44e-04
111	9	-0.07	-0.12	-0.03	-1.05e-03	-3.15e-04	-5.68e-04
111	10	-0.07	0.10	-6.05e-03	-1.22e-03	-2.97e-04	-5.09e-04
111	11	0.08	-0.13	-0.03	-1.05e-03	-3.12e-04	4.85e-04
111	12	0.06	-7.96e-03	-0.02	-1.13e-03	-2.79e-04	2.22e-04
111	13	-0.05	-0.03	-0.01	-1.14e-03	-3.30e-04	-2.45e-04
111	14	0.07	-0.03	-0.02	-1.13e-03	-2.81e-04	-2.67e-04
111	15	-0.06	-5.27e-03	-0.01	-1.14e-03	-3.29e-04	2.43e-04
111	16	0.04	0.03	-0.01	-1.17e-03	-3.00e-04	2.49e-04
111	17	-0.03	-0.07	-0.02	-1.09e-03	-3.10e-04	-2.73e-04
111	18	-0.03	0.04	-0.01	-1.17e-03	-3.01e-04	-2.45e-04
111	19	0.04	-0.07	-0.02	-1.09e-03	-3.08e-04	2.21e-04
111	20	4.47e-03	-0.02	-0.02	-1.13e-03	-3.05e-04	-1.18e-05
111	21	4.47e-03	-0.02	-0.02	-1.13e-03	-3.05e-04	-1.18e-05

111	22	4.47e-03	-0.02	-0.02	-1.13e-03	-3.05e-04	-1.18e-05
112	1	3.00e-03	-6.66e-03	-7.56e-03	-3.89e-04	-1.18e-04	-4.13e-06
112	2	3.80e-06	-3.71e-04	-6.35e-03	4.57e-06	0.0	-4.27e-06
112	3	2.00e-03	-4.49e-03	-5.88e-03	-2.59e-04	-7.84e-05	-3.32e-06
112	4	0.13	-0.02	-3.07e-03	-2.85e-04	1.07e-05	4.81e-04
112	5	-0.13	0.01	-8.70e-03	-2.32e-04	-1.67e-04	-4.87e-04
112	6	0.12	9.84e-03	-3.25e-03	-2.83e-04	7.36e-06	-5.40e-04
112	7	-0.12	-0.02	-8.51e-03	-2.35e-04	-1.64e-04	5.33e-04
112	8	-0.07	0.10	-0.01	-3.75e-04	-6.37e-05	5.40e-04
112	9	0.08	-0.11	1.80e-03	-1.42e-04	-9.30e-05	-5.46e-04
112	10	0.06	0.10	-0.01	-3.78e-04	-6.82e-05	-4.93e-04
112	11	-0.06	-0.11	2.11e-03	-1.40e-04	-8.85e-05	4.87e-04
112	12	0.07	-0.01	-4.53e-03	-2.72e-04	-3.50e-05	2.23e-04
112	13	-0.06	4.41e-03	-7.24e-03	-2.46e-04	-1.22e-04	-2.30e-04
112	14	0.06	2.26e-03	-4.62e-03	-2.70e-04	-3.70e-05	-2.56e-04
112	15	-0.05	-0.01	-7.15e-03	-2.47e-04	-1.20e-04	2.49e-04
112	16	-0.03	0.05	-9.61e-03	-3.16e-04	-7.13e-05	2.51e-04
112	17	0.04	-0.06	-2.16e-03	-2.02e-04	-8.55e-05	-2.58e-04
112	18	0.03	0.05	-9.75e-03	-3.16e-04	-7.37e-05	-2.34e-04
112	19	-0.03	-0.06	-2.02e-03	-2.02e-04	-8.31e-05	2.27e-04
112	20	2.00e-03	-4.49e-03	-5.88e-03	-2.59e-04	-7.84e-05	-3.32e-06
112	21	2.00e-03	-4.49e-03	-5.88e-03	-2.59e-04	-7.84e-05	-3.32e-06
112	22	2.00e-03	-4.49e-03	-5.88e-03	-2.59e-04	-7.84e-05	-3.32e-06
113	1	-1.64e-04	3.97e-03	-0.04	1.19e-04	4.15e-05	-9.13e-06
113	2	-2.02e-04	1.83e-05	-7.49e-03	-1.08e-05	1.02e-05	6.69e-06
113	3	-1.36e-04	2.65e-03	-0.03	7.82e-05	2.90e-05	-5.20e-06
113	4	0.11	-0.01	-0.03	1.20e-04	1.19e-04	5.08e-04
113	5	-0.11	0.02	-0.03	3.65e-05	-6.14e-05	-5.19e-04
113	6	0.11	9.81e-03	-0.03	1.17e-04	1.17e-04	-5.62e-04
113	7	-0.11	-4.51e-03	-0.03	3.89e-05	-5.93e-05	5.52e-04
113	8	-0.05	0.11	-0.03	1.07e-04	7.94e-05	5.68e-04
113	9	0.05	-0.10	-0.02	4.93e-05	-2.13e-05	-5.79e-04
113	10	0.04	0.11	-0.03	1.05e-04	7.88e-05	-5.14e-04
113	11	-0.04	-0.10	-0.02	5.13e-05	-2.08e-05	5.03e-04
113	12	0.06	-3.43e-03	-0.03	9.86e-05	7.31e-05	2.37e-04
113	13	-0.06	8.73e-03	-0.03	5.77e-05	-1.50e-05	-2.47e-04
113	14	0.05	6.03e-03	-0.03	9.70e-05	7.19e-05	-2.66e-04
113	15	-0.05	-7.30e-04	-0.03	5.94e-05	-1.38e-05	2.56e-04
113	16	-0.02	0.05	-0.03	9.24e-05	5.36e-05	2.64e-04
113	17	0.02	-0.05	-0.02	6.40e-05	4.46e-06	-2.75e-04
113	18	0.02	0.05	-0.03	9.09e-05	5.31e-05	-2.43e-04
113	19	-0.02	-0.05	-0.02	6.54e-05	4.93e-06	2.33e-04
113	20	-1.36e-04	2.65e-03	-0.03	7.82e-05	2.90e-05	-5.20e-06
113	21	-1.36e-04	2.65e-03	-0.03	7.82e-05	2.90e-05	-5.20e-06
113	22	-1.36e-04	2.65e-03	-0.03	7.82e-05	2.90e-05	-5.20e-06
114	1	-5.96e-03	-2.09e-03	-0.03	1.06e-04	-3.95e-04	-4.07e-06
114	2	0.0	7.29e-05	-7.21e-03	0.0	-2.10e-06	0.0
114	3	-3.97e-03	-1.38e-03	-0.02	7.07e-05	-2.64e-04	-2.64e-06
114	4	0.14	0.06	-0.03	7.58e-05	-1.94e-04	4.94e-04
114	5	-0.15	-0.06	-0.01	6.56e-05	-3.34e-04	-4.99e-04
114	6	0.13	-0.08	-0.03	7.61e-05	-1.96e-04	-5.47e-04
114	7	-0.14	0.07	-0.01	6.53e-05	-3.32e-04	5.41e-04
114	8	-0.03	0.15	-0.02	-3.16e-06	-2.67e-04	5.54e-04
114	9	0.02	-0.15	-0.02	1.45e-04	-2.61e-04	-5.59e-04
114	10	0.01	0.16	-0.02	-6.25e-06	-2.68e-04	-4.99e-04
114	11	-0.02	-0.16	-0.02	1.48e-04	-2.59e-04	4.93e-04
114	12	0.07	0.03	-0.02	7.32e-05	-2.30e-04	2.30e-04
114	13	-0.07	-0.03	-0.01	6.83e-05	-2.98e-04	-2.35e-04
114	14	0.06	-0.04	-0.02	7.32e-05	-2.31e-04	-2.58e-04
114	15	-0.07	0.03	-0.02	6.82e-05	-2.97e-04	2.53e-04
114	16	-0.02	0.07	-0.02	3.50e-05	-2.65e-04	2.59e-04
114	17	7.13e-03	-0.07	-0.02	1.06e-04	-2.63e-04	-2.64e-04
114	18	4.08e-03	0.08	-0.02	3.34e-05	-2.66e-04	-2.35e-04
114	19	-0.01	-0.08	-0.02	1.08e-04	-2.62e-04	2.30e-04
114	20	-3.97e-03	-1.38e-03	-0.02	7.07e-05	-2.64e-04	-2.64e-06
114	21	-3.97e-03	-1.38e-03	-0.02	7.07e-05	-2.64e-04	-2.64e-06
114	22	-3.97e-03	-1.38e-03	-0.02	7.07e-05	-2.64e-04	-2.64e-06
115	1	4.23e-03	8.58e-04	2.67e-03	-3.38e-05	1.26e-04	-4.07e-06
115	2	-1.04e-04	1.44e-05	-7.50e-03	0.0	0.0	0.0
115	3	2.81e-03	5.74e-04	7.83e-04	-2.25e-05	8.39e-05	-2.64e-06
115	4	0.15	0.04	-4.68e-03	-2.71e-05	1.54e-04	4.98e-04
115	5	-0.14	-0.04	6.25e-03	-1.79e-05	1.35e-05	-5.03e-04
115	6	0.14	-0.05	-4.57e-03	-2.42e-05	1.53e-04	-5.52e-04
115	7	-0.14	0.05	6.14e-03	-2.07e-05	1.50e-05	5.47e-04
115	8	-0.01	0.14	-6.83e-04	-9.12e-05	8.18e-05	5.58e-04
115	9	0.02	-0.14	2.25e-03	4.62e-05	8.61e-05	-5.63e-04
115	10	0.01	0.15	-6.87e-04	-9.35e-05	7.98e-05	-5.04e-04

115	11	-9.02e-03	-0.15	2.25e-03	4.85e-05	8.81e-05	4.99e-04
115	12	0.07	0.02	-1.87e-03	-2.47e-05	1.18e-04	2.32e-04
115	13	-0.07	-0.02	3.44e-03	-2.03e-05	4.98e-05	-2.38e-04
115	14	0.07	-0.02	-1.82e-03	-2.33e-05	1.17e-04	-2.60e-04
115	15	-0.06	0.02	3.39e-03	-2.17e-05	5.04e-05	2.55e-04
115	16	-4.84e-03	0.07	6.84e-05	-5.58e-05	8.29e-05	2.60e-04
115	17	0.01	-0.07	1.50e-03	1.08e-05	8.49e-05	-2.66e-04
115	18	8.36e-03	0.07	6.58e-05	-5.68e-05	8.19e-05	-2.38e-04
115	19	-2.74e-03	-0.07	1.50e-03	1.19e-05	8.59e-05	2.33e-04
115	20	2.81e-03	5.74e-04	7.83e-04	-2.25e-05	8.39e-05	-2.64e-06
115	21	2.81e-03	5.74e-04	7.83e-04	-2.25e-05	8.39e-05	-2.64e-06
115	22	2.81e-03	5.74e-04	7.83e-04	-2.25e-05	8.39e-05	-2.64e-06
116	1	6.65e-03	-0.03	-0.01	1.72e-03	4.71e-04	1.78e-06
116	2	-1.82e-05	-3.65e-05	-7.26e-03	1.26e-05	9.87e-06	4.59e-06
116	3	4.43e-03	-0.02	-9.60e-03	1.15e-03	3.15e-04	1.80e-06
116	4	0.15	3.12e-03	-0.01	1.18e-03	3.77e-04	5.01e-04
116	5	-0.14	-0.04	-6.74e-03	1.12e-03	2.54e-04	-4.98e-04
116	6	0.17	-0.04	-0.01	1.18e-03	3.75e-04	-5.46e-04
116	7	-0.16	9.71e-03	-6.96e-03	1.12e-03	2.56e-04	5.50e-04
116	8	0.08	0.12	2.42e-04	1.07e-03	3.08e-04	5.62e-04
116	9	-0.07	-0.15	-0.02	1.23e-03	3.22e-04	-5.58e-04
116	10	-0.07	0.13	6.10e-04	1.07e-03	3.10e-04	-4.98e-04
116	11	0.08	-0.16	-0.02	1.23e-03	3.21e-04	5.01e-04
116	12	0.07	-7.49e-03	-0.01	1.16e-03	3.45e-04	2.36e-04
116	13	-0.07	-0.03	-8.22e-03	1.14e-03	2.85e-04	-2.32e-04
116	14	0.08	-0.03	-0.01	1.16e-03	3.44e-04	-2.56e-04
116	15	-0.07	-4.34e-03	-8.32e-03	1.14e-03	2.87e-04	2.59e-04
116	16	0.04	0.05	-4.83e-03	1.11e-03	3.12e-04	2.65e-04
116	17	-0.03	-0.08	-0.01	1.19e-03	3.19e-04	-2.61e-04
116	18	-0.03	0.05	-4.66e-03	1.11e-03	3.13e-04	-2.32e-04
116	19	0.04	-0.09	-0.01	1.19e-03	3.18e-04	2.36e-04
116	20	4.43e-03	-0.02	-9.60e-03	1.15e-03	3.15e-04	1.80e-06
116	21	4.43e-03	-0.02	-9.60e-03	1.15e-03	3.15e-04	1.80e-06
116	22	4.43e-03	-0.02	-9.60e-03	1.15e-03	3.15e-04	1.80e-06
117	1	1.18e-03	-3.58e-03	-0.04	-1.24e-04	-2.37e-05	0.0
117	2	-7.35e-05	-1.03e-04	-7.49e-03	4.24e-06	1.42e-05	-5.52e-06
117	3	7.80e-04	-2.40e-03	-0.03	-8.22e-05	-1.39e-05	0.0
117	4	0.11	9.14e-03	-0.03	-1.72e-04	5.20e-05	5.07e-04
117	5	-0.11	-0.01	-0.02	7.64e-06	-7.99e-05	-5.08e-04
117	6	0.11	-0.02	-0.03	-1.71e-04	5.01e-05	-5.62e-04
117	7	-0.11	0.01	-0.02	6.91e-06	-7.79e-05	5.62e-04
117	8	0.04	0.10	-0.02	-7.54e-05	-9.17e-06	5.70e-04
117	9	-0.04	-0.10	-0.03	-8.90e-05	-1.87e-05	-5.70e-04
117	10	-0.04	0.10	-0.02	-7.11e-05	-9.73e-06	-5.10e-04
117	11	0.04	-0.11	-0.03	-9.33e-05	-1.81e-05	5.10e-04
117	12	0.05	3.00e-03	-0.03	-1.26e-04	1.81e-05	2.37e-04
117	13	-0.05	-7.80e-03	-0.03	-3.88e-05	-4.60e-05	-2.37e-04
117	14	0.06	-9.65e-03	-0.03	-1.26e-04	1.71e-05	-2.65e-04
117	15	-0.05	4.85e-03	-0.03	-3.87e-05	-4.50e-05	2.65e-04
117	16	0.02	0.05	-0.02	-7.89e-05	-1.16e-05	2.68e-04
117	17	-0.02	-0.05	-0.03	-8.55e-05	-1.63e-05	-2.68e-04
117	18	-0.02	0.05	-0.02	-7.70e-05	-1.19e-05	-2.39e-04
117	19	0.02	-0.05	-0.03	-8.74e-05	-1.60e-05	2.39e-04
117	20	7.80e-04	-2.40e-03	-0.03	-8.22e-05	-1.39e-05	0.0
117	21	7.80e-04	-2.40e-03	-0.03	-8.22e-05	-1.39e-05	0.0
117	22	7.80e-04	-2.40e-03	-0.03	-8.22e-05	-1.39e-05	0.0
118	1	-1.77e-03	6.74e-03	-0.03	-3.94e-04	-1.03e-04	-3.10e-06
118	2	1.34e-05	-8.98e-05	-7.24e-03	-1.71e-06	1.11e-06	0.0
118	3	-1.18e-03	4.48e-03	-0.02	-2.63e-04	-6.83e-05	-1.96e-06
118	4	0.15	0.02	-0.02	-2.79e-04	4.69e-06	4.95e-04
118	5	-0.15	-0.01	-0.02	-2.47e-04	-1.41e-04	-4.99e-04
118	6	0.16	-0.02	-0.02	-2.81e-04	3.68e-06	-5.45e-04
118	7	-0.16	0.03	-0.02	-2.45e-04	-1.40e-04	5.41e-04
118	8	0.07	0.14	-0.01	-3.24e-04	-6.70e-05	5.54e-04
118	9	-0.07	-0.13	-0.03	-2.02e-04	-6.96e-05	-5.58e-04
118	10	-0.07	0.15	-0.01	-3.27e-04	-7.36e-05	-4.98e-04
118	11	0.06	-0.14	-0.03	-1.99e-04	-6.30e-05	4.94e-04
118	12	0.07	0.01	-0.02	-2.71e-04	-3.29e-05	2.31e-04
118	13	-0.07	-3.81e-03	-0.02	-2.55e-04	-1.04e-04	-2.35e-04
118	14	0.08	-6.71e-03	-0.02	-2.72e-04	-3.33e-05	-2.57e-04
118	15	-0.08	0.02	-0.02	-2.54e-04	-1.03e-04	2.53e-04
118	16	0.03	0.07	-0.02	-2.93e-04	-6.77e-05	2.59e-04
118	17	-0.03	-0.06	-0.02	-2.34e-04	-6.89e-05	-2.63e-04
118	18	-0.03	0.07	-0.02	-2.94e-04	-7.09e-05	-2.35e-04
118	19	0.03	-0.07	-0.02	-2.32e-04	-6.57e-05	2.31e-04
118	20	-1.18e-03	4.48e-03	-0.02	-2.63e-04	-6.83e-05	-1.96e-06
118	21	-1.18e-03	4.48e-03	-0.02	-2.63e-04	-6.83e-05	-1.96e-06

118	22	-1.18e-03	4.48e-03	-0.02	-2.63e-04	-6.83e-05	-1.96e-06
119	1	1.19e-03	-3.48e-03	2.66e-03	1.27e-04	3.49e-05	-4.76e-06
119	2	-3.60e-05	3.73e-06	-7.51e-03	0.0	0.0	0.0
119	3	7.91e-04	-2.32e-03	7.71e-04	8.44e-05	2.33e-05	-3.12e-06
119	4	0.14	0.01	-8.35e-04	9.65e-05	9.80e-05	4.98e-04
119	5	-0.14	-0.01	2.38e-03	7.22e-05	-5.13e-05	-5.04e-04
119	6	0.15	-0.02	-7.12e-04	9.43e-05	9.65e-05	-5.53e-04
119	7	-0.15	0.01	2.25e-03	7.44e-05	-4.99e-05	5.47e-04
119	8	0.04	0.14	6.09e-03	1.21e-05	2.08e-05	5.58e-04
119	9	-0.04	-0.14	-4.55e-03	1.57e-04	2.59e-05	-5.65e-04
119	10	-0.04	0.14	6.29e-03	1.02e-05	1.79e-05	-5.05e-04
119	11	0.04	-0.15	-4.74e-03	1.59e-04	2.88e-05	4.98e-04
119	12	0.07	3.51e-03	-1.42e-06	9.01e-05	5.95e-05	2.32e-04
119	13	-0.07	-8.15e-03	1.54e-03	7.86e-05	-1.29e-05	-2.38e-04
119	14	0.07	-0.01	5.35e-05	8.92e-05	5.89e-05	-2.61e-04
119	15	-0.07	5.50e-03	1.49e-03	7.95e-05	-1.22e-05	2.55e-04
119	16	0.02	0.06	3.35e-03	4.93e-05	2.22e-05	2.60e-04
119	17	-0.02	-0.07	-1.81e-03	1.19e-04	2.45e-05	-2.67e-04
119	18	-0.02	0.07	3.44e-03	4.86e-05	2.07e-05	-2.38e-04
119	19	0.02	-0.07	-1.90e-03	1.20e-04	2.59e-05	2.32e-04
119	20	7.91e-04	-2.32e-03	7.71e-04	8.44e-05	2.33e-05	-3.12e-06
119	21	7.91e-04	-2.32e-03	7.71e-04	8.44e-05	2.33e-05	-3.12e-06
119	22	7.91e-04	-2.32e-03	7.71e-04	8.44e-05	2.33e-05	-3.12e-06
120	1	0.01	-0.05	-0.02	6.86e-06	1.02e-05	3.35e-05
120	2	-3.70e-04	-2.21e-04	-7.09e-03	1.07e-05	8.64e-06	2.23e-05
120	3	8.83e-03	-0.03	-0.01	6.00e-06	7.93e-06	2.53e-05
120	4	0.14	-0.02	-0.02	-1.75e-05	9.32e-05	5.24e-04
120	5	-0.13	-0.05	-0.01	2.95e-05	-7.74e-05	-4.73e-04
120	6	0.16	-0.06	-0.02	-1.95e-05	9.25e-05	-5.23e-04
120	7	-0.14	-8.65e-03	-0.01	3.15e-05	-7.67e-05	5.74e-04
120	8	0.09	0.09	-3.05e-03	-5.39e-05	1.26e-05	5.86e-04
120	9	-0.07	-0.16	-0.02	6.59e-05	3.27e-06	-5.35e-04
120	10	-0.07	0.09	-2.70e-03	-5.66e-05	-1.22e-06	-4.73e-04
120	11	0.08	-0.16	-0.02	6.86e-05	1.71e-05	5.24e-04
120	12	0.07	-0.03	-0.01	-5.32e-06	4.92e-05	2.59e-04
120	13	-0.05	-0.04	-0.01	1.73e-05	-3.33e-05	-2.08e-04
120	14	0.08	-0.05	-0.01	-6.52e-06	4.92e-05	-2.33e-04
120	15	-0.06	-0.02	-0.01	1.85e-05	-3.33e-05	2.83e-04
120	16	0.04	0.02	-8.10e-03	-2.29e-05	1.01e-05	2.88e-04
120	17	-0.03	-0.09	-0.02	3.49e-05	5.74e-06	-2.38e-04
120	18	-0.03	0.03	-7.94e-03	-2.44e-05	3.57e-06	-2.08e-04
120	19	0.04	-0.10	-0.02	3.64e-05	1.23e-05	2.59e-04
120	20	8.83e-03	-0.03	-0.01	6.00e-06	7.93e-06	2.53e-05
120	21	8.83e-03	-0.03	-0.01	6.00e-06	7.93e-06	2.53e-05
120	22	8.83e-03	-0.03	-0.01	6.00e-06	7.93e-06	2.53e-05
121	1	5.24e-04	-7.50e-04	-0.07	-1.79e-03	0.0	-3.47e-06
121	2	-7.59e-05	-3.69e-05	-7.33e-03	-1.19e-05	0.0	0.0
121	3	3.39e-04	-5.05e-04	-0.05	-1.19e-03	0.0	-2.38e-06
121	4	0.10	-6.93e-03	-0.05	-1.15e-03	2.14e-04	4.92e-04
121	5	-0.10	5.92e-03	-0.05	-1.23e-03	-2.14e-04	-4.96e-04
121	6	0.10	-4.72e-03	-0.05	-1.15e-03	2.09e-04	-5.54e-04
121	7	-0.10	3.71e-03	-0.05	-1.23e-03	-2.09e-04	5.49e-04
121	8	2.33e-03	0.10	-0.05	-1.29e-03	-5.28e-05	5.53e-04
121	9	-1.65e-03	-0.10	-0.05	-1.09e-03	5.27e-05	-5.58e-04
121	10	-8.04e-03	0.10	-0.05	-1.29e-03	-5.80e-05	-4.98e-04
121	11	8.72e-03	-0.10	-0.05	-1.09e-03	5.79e-05	4.94e-04
121	12	0.05	-3.60e-03	-0.05	-1.17e-03	1.03e-04	2.28e-04
121	13	-0.05	2.59e-03	-0.05	-1.21e-03	-1.04e-04	-2.33e-04
121	14	0.05	-2.47e-03	-0.05	-1.17e-03	1.01e-04	-2.63e-04
121	15	-0.05	1.46e-03	-0.05	-1.21e-03	-1.02e-04	2.58e-04
121	16	1.28e-03	0.05	-0.05	-1.24e-03	-2.56e-05	2.59e-04
121	17	-5.98e-04	-0.05	-0.05	-1.14e-03	2.55e-05	-2.64e-04
121	18	-3.68e-03	0.05	-0.05	-1.24e-03	-2.78e-05	-2.34e-04
121	19	4.35e-03	-0.05	-0.05	-1.14e-03	2.77e-05	2.30e-04
121	20	3.39e-04	-5.05e-04	-0.05	-1.19e-03	0.0	-2.38e-06
121	21	3.39e-04	-5.05e-04	-0.05	-1.19e-03	0.0	-2.38e-06
121	22	3.39e-04	-5.05e-04	-0.05	-1.19e-03	0.0	-2.38e-06
122	1	6.02e-04	1.18e-03	-0.07	1.78e-03	0.0	-1.11e-05
122	2	-8.85e-05	-2.49e-05	-7.33e-03	1.67e-05	-1.82e-06	1.44e-05
122	3	3.89e-04	7.81e-04	-0.05	1.19e-03	0.0	-5.46e-06
122	4	0.10	-5.65e-03	-0.05	1.08e-03	1.33e-04	4.94e-04
122	5	-0.10	7.21e-03	-0.05	1.29e-03	-1.32e-04	-5.05e-04
122	6	0.10	-3.43e-03	-0.05	1.09e-03	1.31e-04	-5.59e-04
122	7	-0.10	4.99e-03	-0.05	1.29e-03	-1.31e-04	5.48e-04
122	8	-8.77e-03	0.10	-0.05	8.99e-04	8.54e-05	5.57e-04
122	9	9.55e-03	-0.10	-0.05	1.47e-03	-8.48e-05	-5.68e-04
122	10	7.45e-03	0.10	-0.05	8.95e-04	8.65e-05	-5.23e-04

122	11	-6.67e-03	-0.10	-0.05	1.48e-03	-8.58e-05	5.12e-04
122	12	0.05	-2.31e-03	-0.05	1.13e-03	6.48e-05	2.29e-04
122	13	-0.05	3.87e-03	-0.05	1.24e-03	-6.42e-05	-2.39e-04
122	14	0.05	-1.18e-03	-0.05	1.14e-03	6.40e-05	-2.66e-04
122	15	-0.05	2.75e-03	-0.05	1.23e-03	-6.34e-05	2.55e-04
122	16	-3.91e-03	0.05	-0.05	1.05e-03	4.17e-05	2.56e-04
122	17	4.69e-03	-0.05	-0.05	1.33e-03	-4.10e-05	-2.67e-04
122	18	3.73e-03	0.05	-0.05	1.05e-03	4.21e-05	-2.50e-04
122	19	-2.95e-03	-0.05	-0.05	1.33e-03	-4.15e-05	2.39e-04
122	20	3.89e-04	7.81e-04	-0.05	1.19e-03	0.0	-5.46e-06
122	21	3.89e-04	7.81e-04	-0.05	1.19e-03	0.0	-5.46e-06
122	22	3.89e-04	7.81e-04	-0.05	1.19e-03	0.0	-5.46e-06
123	1	9.92e-04	0.03	-0.02	1.78e-03	0.0	1.16e-05
123	2	-2.62e-04	8.73e-04	-6.51e-03	2.98e-06	0.0	2.44e-05
123	3	6.26e-04	0.02	-0.02	1.19e-03	0.0	1.10e-05
123	4	0.14	0.01	-0.02	1.18e-03	9.08e-05	5.05e-04
123	5	-0.14	0.02	-0.02	1.20e-03	-9.00e-05	-4.83e-04
123	6	0.13	0.01	-0.02	1.18e-03	8.74e-05	-5.34e-04
123	7	-0.13	0.02	-0.02	1.20e-03	-8.65e-05	5.56e-04
123	8	-0.09	0.12	-0.03	1.10e-03	1.58e-05	5.65e-04
123	9	0.09	-0.09	-6.17e-03	1.28e-03	-1.50e-05	-5.43e-04
123	10	0.07	0.13	-0.03	1.10e-03	1.11e-05	-4.88e-04
123	11	-0.07	-0.09	-5.85e-03	1.28e-03	-1.03e-05	5.10e-04
123	12	0.07	0.01	-0.02	1.18e-03	4.45e-05	2.43e-04
123	13	-0.07	0.02	-0.02	1.20e-03	-4.37e-05	-2.21e-04
123	14	0.06	0.02	-0.02	1.18e-03	4.23e-05	-2.45e-04
123	15	-0.06	0.02	-0.02	1.19e-03	-4.15e-05	2.67e-04
123	16	-0.04	0.07	-0.02	1.15e-03	7.81e-06	2.70e-04
123	17	0.04	-0.03	-0.01	1.23e-03	-7.00e-06	-2.48e-04
123	18	0.04	0.07	-0.02	1.14e-03	5.33e-06	-2.23e-04
123	19	-0.03	-0.04	-0.01	1.23e-03	-4.52e-06	2.45e-04
123	20	6.26e-04	0.02	-0.02	1.19e-03	0.0	1.10e-05
123	21	6.26e-04	0.02	-0.02	1.19e-03	0.0	1.10e-05
123	22	6.26e-04	0.02	-0.02	1.19e-03	0.0	1.10e-05
124	1	1.12e-03	0.03	-0.01	-1.80e-03	9.93e-06	-1.28e-05
124	2	-1.84e-04	-1.12e-04	-7.33e-03	-2.89e-05	6.12e-06	-4.07e-06
124	3	7.22e-04	0.02	-9.69e-03	-1.20e-03	7.44e-06	-9.07e-06
124	4	0.16	8.81e-03	-0.01	-1.23e-03	9.30e-05	4.88e-04
124	5	-0.16	0.03	-9.01e-03	-1.18e-03	-7.81e-05	-5.06e-04
124	6	0.15	0.01	-0.01	-1.23e-03	8.94e-05	-5.54e-04
124	7	-0.15	0.02	-9.34e-03	-1.18e-03	-7.45e-05	5.36e-04
124	8	-0.09	0.15	-0.02	-1.31e-03	2.11e-05	5.47e-04
124	9	0.09	-0.12	6.13e-04	-1.09e-03	-6.27e-06	-5.66e-04
124	10	0.07	0.16	-0.02	-1.31e-03	1.77e-05	-5.07e-04
124	11	-0.07	-0.12	9.43e-04	-1.09e-03	-2.84e-06	4.89e-04
124	12	0.08	0.01	-0.01	-1.22e-03	4.91e-05	2.24e-04
124	13	-0.08	0.02	-9.36e-03	-1.19e-03	-3.42e-05	-2.42e-04
124	14	0.07	0.01	-9.86e-03	-1.22e-03	4.70e-05	-2.65e-04
124	15	-0.07	0.02	-9.52e-03	-1.19e-03	-3.22e-05	2.47e-04
124	16	-0.04	0.08	-0.01	-1.26e-03	1.41e-05	2.52e-04
124	17	0.04	-0.05	-4.69e-03	-1.15e-03	0.0	-2.70e-04
124	18	0.04	0.08	-0.01	-1.26e-03	1.23e-05	-2.42e-04
124	19	-0.03	-0.05	-4.55e-03	-1.15e-03	2.62e-06	2.24e-04
124	20	7.22e-04	0.02	-9.69e-03	-1.20e-03	7.44e-06	-9.07e-06
124	21	7.22e-04	0.02	-9.69e-03	-1.20e-03	7.44e-06	-9.07e-06
124	22	7.22e-04	0.02	-9.69e-03	-1.20e-03	7.44e-06	-9.07e-06
125	1	5.85e-04	1.15e-03	0.04	-1.76e-03	0.0	0.0
125	2	-8.14e-05	-3.13e-05	-7.72e-03	1.06e-05	0.0	1.31e-06
125	3	3.79e-04	7.64e-04	0.02	-1.17e-03	0.0	0.0
125	4	0.14	-8.12e-03	0.02	-1.16e-03	7.50e-05	4.98e-04
125	5	-0.14	9.64e-03	0.02	-1.18e-03	-7.43e-05	-4.99e-04
125	6	0.14	-4.66e-03	0.02	-1.16e-03	7.26e-05	-5.46e-04
125	7	-0.14	6.19e-03	0.02	-1.18e-03	-7.19e-05	5.45e-04
125	8	-9.94e-03	0.14	0.02	-1.22e-03	5.71e-06	5.57e-04
125	9	0.01	-0.14	0.02	-1.11e-03	-5.06e-06	-5.58e-04
125	10	9.12e-03	0.14	0.02	-1.23e-03	4.89e-06	-4.98e-04
125	11	-8.37e-03	-0.14	0.02	-1.11e-03	-4.25e-06	4.97e-04
125	12	0.07	-3.52e-03	0.02	-1.16e-03	3.66e-05	2.33e-04
125	13	-0.07	5.04e-03	0.02	-1.17e-03	-3.60e-05	-2.34e-04
125	14	0.07	-1.78e-03	0.02	-1.16e-03	3.54e-05	-2.56e-04
125	15	-0.07	3.31e-03	0.02	-1.17e-03	-3.47e-05	2.55e-04
125	16	-4.47e-03	0.07	0.02	-1.20e-03	2.92e-06	2.62e-04
125	17	5.23e-03	-0.07	0.02	-1.14e-03	-2.27e-06	-2.62e-04
125	18	4.54e-03	0.07	0.02	-1.20e-03	2.52e-06	-2.33e-04
125	19	-3.78e-03	-0.07	0.02	-1.14e-03	-1.87e-06	2.33e-04
125	20	3.79e-04	7.64e-04	0.02	-1.17e-03	0.0	0.0
125	21	3.79e-04	7.64e-04	0.02	-1.17e-03	0.0	0.0

125	22	3.79e-04	7.64e-04	0.02	-1.17e-03	0.0	0.0
126	1	5.03e-04	-7.37e-04	0.04	1.76e-03	0.0	-4.43e-06
126	2	-6.98e-05	-2.08e-05	-7.72e-03	-1.01e-05	0.0	0.0
126	3	3.26e-04	-4.94e-04	0.02	1.17e-03	0.0	-2.90e-06
126	4	0.14	-9.37e-03	0.02	1.17e-03	6.68e-05	4.91e-04
126	5	-0.14	8.39e-03	0.02	1.18e-03	-6.68e-05	-4.97e-04
126	6	0.14	-5.92e-03	0.02	1.17e-03	6.56e-05	-5.44e-04
126	7	-0.14	4.93e-03	0.02	1.18e-03	-6.55e-05	5.38e-04
126	8	1.19e-03	0.14	0.02	1.10e-03	3.18e-06	5.50e-04
126	9	-5.36e-04	-0.14	0.02	1.24e-03	-3.08e-06	-5.56e-04
126	10	-0.01	0.14	0.02	1.10e-03	3.90e-06	-4.97e-04
126	11	0.01	-0.14	0.02	1.24e-03	-3.80e-06	4.91e-04
126	12	0.07	-4.77e-03	0.02	1.17e-03	3.25e-05	2.29e-04
126	13	-0.07	3.78e-03	0.02	1.17e-03	-3.24e-05	-2.35e-04
126	14	0.07	-3.04e-03	0.02	1.17e-03	3.19e-05	-2.57e-04
126	15	-0.07	2.05e-03	0.02	1.17e-03	-3.18e-05	2.51e-04
126	16	7.28e-04	0.07	0.02	1.14e-03	1.57e-06	2.56e-04
126	17	-7.62e-05	-0.07	0.02	1.20e-03	-1.47e-06	-2.62e-04
126	18	-4.72e-03	0.07	0.02	1.14e-03	1.93e-06	-2.34e-04
126	19	5.37e-03	-0.07	0.02	1.20e-03	-1.83e-06	2.29e-04
126	20	3.26e-04	-4.94e-04	0.02	1.17e-03	0.0	-2.90e-06
126	21	3.26e-04	-4.94e-04	0.02	1.17e-03	0.0	-2.90e-06
126	22	3.26e-04	-4.94e-04	0.02	1.17e-03	0.0	-2.90e-06
127	1	1.07e-03	-6.70e-03	-0.03	4.16e-04	2.68e-06	-5.08e-06
127	2	-1.56e-04	5.80e-05	-7.24e-03	5.07e-06	1.19e-06	0.0
127	3	6.93e-04	-4.46e-03	-0.02	2.78e-04	1.94e-06	-3.32e-06
127	4	0.16	-0.01	-0.02	2.97e-04	6.72e-05	5.00e-04
127	5	-0.16	4.27e-03	-0.02	2.58e-04	-6.33e-05	-5.06e-04
127	6	0.15	-9.81e-03	-0.02	2.96e-04	6.62e-05	-5.53e-04
127	7	-0.15	8.90e-04	-0.02	2.60e-04	-6.23e-05	5.47e-04
127	8	-0.08	0.13	-0.03	2.38e-04	0.0	5.60e-04
127	9	0.08	-0.14	-0.01	3.17e-04	3.86e-06	-5.66e-04
127	10	0.07	0.14	-0.03	2.36e-04	-3.82e-06	-5.05e-04
127	11	-0.06	-0.15	-0.01	3.20e-04	7.71e-06	4.99e-04
127	12	0.08	-8.67e-03	-0.02	2.87e-04	3.35e-05	2.33e-04
127	13	-0.08	-2.54e-04	-0.02	2.68e-04	-2.96e-05	-2.39e-04
127	14	0.07	-6.97e-03	-0.02	2.86e-04	3.32e-05	-2.61e-04
127	15	-0.07	-1.95e-03	-0.02	2.69e-04	-2.94e-05	2.55e-04
127	16	-0.04	0.06	-0.02	2.59e-04	1.03e-06	2.61e-04
127	17	0.04	-0.07	-0.02	2.97e-04	2.86e-06	-2.68e-04
127	18	0.03	0.06	-0.02	2.57e-04	0.0	-2.39e-04
127	19	-0.03	-0.07	-0.01	2.98e-04	4.70e-06	2.32e-04
127	20	6.93e-04	-4.46e-03	-0.02	2.78e-04	1.94e-06	-3.32e-06
127	21	6.93e-04	-4.46e-03	-0.02	2.78e-04	1.94e-06	-3.32e-06
127	22	6.93e-04	-4.46e-03	-0.02	2.78e-04	1.94e-06	-3.32e-06
128	1	8.69e-04	3.94e-03	2.65e-03	-1.28e-04	1.58e-06	-3.08e-06
128	2	-1.22e-04	-4.49e-05	-7.51e-03	1.02e-06	0.0	0.0
128	3	5.63e-04	2.62e-03	7.66e-04	-8.49e-05	1.13e-06	-1.94e-06
128	4	0.15	-6.22e-03	3.94e-04	-1.02e-04	6.96e-05	4.94e-04
128	5	-0.15	0.01	1.14e-03	-6.73e-05	-6.74e-05	-4.98e-04
128	6	0.14	-2.79e-03	5.65e-04	-1.00e-04	6.79e-05	-5.47e-04
128	7	-0.14	8.02e-03	9.67e-04	-6.97e-05	-6.57e-05	5.43e-04
128	8	-0.05	0.14	-4.82e-03	-1.75e-04	-1.85e-06	5.54e-04
128	9	0.05	-0.14	6.35e-03	5.43e-06	4.12e-06	-5.58e-04
128	10	0.04	0.15	-5.00e-03	-1.77e-04	-4.21e-06	-4.99e-04
128	11	-0.04	-0.14	6.53e-03	7.17e-06	6.48e-06	4.95e-04
128	12	0.07	-1.64e-03	5.84e-04	-9.36e-05	3.43e-05	2.31e-04
128	13	-0.07	6.88e-03	9.47e-04	-7.62e-05	-3.21e-05	-2.34e-04
128	14	0.07	8.57e-05	6.69e-04	-9.22e-05	3.36e-05	-2.58e-04
128	15	-0.07	5.15e-03	8.63e-04	-7.76e-05	-3.13e-05	2.54e-04
128	16	-0.02	0.07	-1.94e-03	-1.29e-04	0.0	2.59e-04
128	17	0.02	-0.06	3.47e-03	-4.10e-05	2.54e-06	-2.63e-04
128	18	0.02	0.07	-2.02e-03	-1.29e-04	-1.40e-06	-2.35e-04
128	19	-0.02	-0.07	3.55e-03	-4.05e-05	3.67e-06	2.31e-04
128	20	5.63e-04	2.62e-03	7.66e-04	-8.49e-05	1.13e-06	-1.94e-06
128	21	5.63e-04	2.62e-03	7.66e-04	-8.49e-05	1.13e-06	-1.94e-06
128	22	5.63e-04	2.62e-03	7.66e-04	-8.49e-05	1.13e-06	-1.94e-06
129	1	6.81e-04	0.05	-0.02	-2.66e-05	1.48e-05	-3.60e-05
129	2	-4.67e-04	-8.42e-04	-7.10e-03	-2.82e-05	7.81e-06	-1.81e-05
129	3	3.92e-04	0.04	-0.01	-2.15e-05	1.09e-05	-2.64e-05
129	4	0.15	0.03	-0.01	1.09e-06	6.76e-05	4.73e-04
129	5	-0.15	0.04	-0.01	-4.41e-05	-4.58e-05	-5.26e-04
129	6	0.14	0.03	-0.01	0.0	6.80e-05	-5.70e-04
129	7	-0.14	0.04	-0.01	-4.27e-05	-4.61e-05	5.17e-04
129	8	-0.09	0.15	-0.02	-5.68e-05	1.22e-06	5.33e-04
129	9	0.09	-0.08	-2.73e-03	1.38e-05	2.07e-05	-5.85e-04
129	10	0.07	0.16	-0.02	-5.89e-05	0.0	-5.22e-04

129	11	-0.07	-0.09	-2.40e-03	1.59e-05	2.22e-05	4.69e-04
129	12	0.07	0.03	-0.01	-1.05e-05	3.82e-05	2.08e-04
129	13	-0.07	0.04	-0.01	-3.25e-05	-1.64e-05	-2.61e-04
129	14	0.07	0.03	-0.01	-1.15e-05	3.88e-05	-2.81e-04
129	15	-0.07	0.04	-0.01	-3.15e-05	-1.70e-05	2.29e-04
129	16	-0.04	0.09	-0.02	-3.84e-05	6.19e-06	2.37e-04
129	17	0.04	-0.02	-7.96e-03	-4.62e-06	1.57e-05	-2.89e-04
129	18	0.03	0.09	-0.02	-3.97e-05	5.70e-06	-2.58e-04
129	19	-0.03	-0.02	-7.81e-03	-3.27e-06	1.62e-05	2.05e-04
129	20	3.92e-04	0.04	-0.01	-2.15e-05	1.09e-05	-2.64e-05
129	21	3.92e-04	0.04	-0.01	-2.15e-05	1.09e-05	-2.64e-05
129	22	3.92e-04	0.04	-0.01	-2.15e-05	1.09e-05	-2.64e-05
130	1	5.23e-05	7.29e-03	-7.95e-03	4.07e-04	-7.18e-06	-2.32e-06
130	2	3.12e-05	1.39e-04	-6.71e-03	-3.12e-06	-2.85e-06	4.35e-06
130	3	3.90e-05	4.88e-03	-6.20e-03	2.71e-04	-5.17e-06	0.0
130	4	0.12	-1.64e-03	-5.50e-03	2.88e-04	1.89e-05	5.04e-04
130	5	-0.12	0.01	-6.89e-03	2.54e-04	-2.92e-05	-5.06e-04
130	6	0.13	5.38e-04	-5.56e-03	2.86e-04	1.67e-05	-5.62e-04
130	7	-0.13	9.22e-03	-6.83e-03	2.56e-04	-2.70e-05	5.60e-04
130	8	0.07	0.11	2.37e-03	1.87e-04	1.86e-05	5.67e-04
130	9	-0.07	-0.10	-0.01	3.55e-04	-2.89e-05	-5.69e-04
130	10	-0.07	0.11	2.65e-03	1.84e-04	1.65e-05	-5.08e-04
130	11	0.07	-0.10	-0.02	3.58e-04	-2.68e-05	5.06e-04
130	12	0.06	1.74e-03	-5.85e-03	2.79e-04	6.65e-06	2.35e-04
130	13	-0.06	8.01e-03	-6.54e-03	2.63e-04	-1.70e-05	-2.37e-04
130	14	0.06	2.84e-03	-5.88e-03	2.78e-04	5.10e-06	-2.66e-04
130	15	-0.06	6.91e-03	-6.51e-03	2.64e-04	-1.54e-05	2.64e-04
130	16	0.03	0.05	-2.04e-03	2.30e-04	6.51e-06	2.66e-04
130	17	-0.03	-0.04	-0.01	3.12e-04	-1.69e-05	-2.68e-04
130	18	-0.03	0.06	-1.91e-03	2.29e-04	5.00e-06	-2.38e-04
130	19	0.03	-0.05	-0.01	3.13e-04	-1.53e-05	2.36e-04
130	20	3.90e-05	4.88e-03	-6.20e-03	2.71e-04	-5.17e-06	0.0
130	21	3.90e-05	4.88e-03	-6.20e-03	2.71e-04	-5.17e-06	0.0
130	22	3.90e-05	4.88e-03	-6.20e-03	2.71e-04	-5.17e-06	0.0
131	1	-1.39e-04	-0.03	-0.02	-1.76e-03	-1.44e-06	-8.78e-06
131	2	-4.15e-05	-3.46e-04	-6.98e-03	1.13e-05	0.0	-5.24e-06
131	3	-9.83e-05	-0.02	-0.02	-1.17e-03	-1.05e-06	-6.55e-06
131	4	0.12	-0.02	-0.02	-1.16e-03	7.89e-05	4.90e-04
131	5	-0.12	-0.01	-0.02	-1.18e-03	-8.10e-05	-5.04e-04
131	6	0.14	-0.02	-0.02	-1.16e-03	7.77e-05	-5.51e-04
131	7	-0.14	-0.01	-0.02	-1.17e-03	-7.98e-05	5.37e-04
131	8	0.08	0.09	-6.09e-03	-1.25e-03	2.26e-06	5.49e-04
131	9	-0.08	-0.12	-0.03	-1.09e-03	-4.37e-06	-5.63e-04
131	10	-0.08	0.09	-5.75e-03	-1.25e-03	-8.83e-06	-5.03e-04
131	11	0.08	-0.13	-0.03	-1.09e-03	6.72e-06	4.90e-04
131	12	0.06	-0.02	-0.02	-1.17e-03	3.76e-05	2.27e-04
131	13	-0.06	-0.01	-0.02	-1.17e-03	-3.97e-05	-2.40e-04
131	14	0.07	-0.02	-0.02	-1.17e-03	3.73e-05	-2.62e-04
131	15	-0.07	-0.02	-0.02	-1.17e-03	-3.95e-05	2.49e-04
131	16	0.04	0.03	-0.01	-1.21e-03	0.0	2.54e-04
131	17	-0.04	-0.07	-0.02	-1.13e-03	-2.61e-06	-2.67e-04
131	18	-0.04	0.04	-0.01	-1.21e-03	-4.78e-06	-2.39e-04
131	19	0.04	-0.07	-0.02	-1.13e-03	2.67e-06	2.26e-04
131	20	-9.83e-05	-0.02	-0.02	-1.17e-03	-1.05e-06	-6.55e-06
131	21	-9.83e-05	-0.02	-0.02	-1.17e-03	-1.05e-06	-6.55e-06
131	22	-9.83e-05	-0.02	-0.02	-1.17e-03	-1.05e-06	-6.55e-06
132	1	1.12e-03	-7.48e-03	-6.75e-03	-3.95e-04	-8.45e-06	1.29e-05
132	2	-8.95e-05	-8.76e-04	-5.54e-03	-7.34e-06	1.15e-05	4.51e-06
132	3	7.32e-04	-5.10e-03	-5.24e-03	-2.64e-04	-4.09e-06	9.20e-06
132	4	0.13	-0.01	-4.06e-03	-3.26e-04	2.24e-05	5.38e-04
132	5	-0.13	1.54e-03	-6.42e-03	-2.03e-04	-3.06e-05	-5.19e-04
132	6	0.12	-9.53e-03	-4.17e-03	-3.21e-04	-2.73e-05	-5.54e-04
132	7	-0.12	-6.69e-04	-6.30e-03	-2.07e-04	1.91e-05	5.73e-04
132	8	-0.08	0.10	-0.01	-4.57e-04	-1.14e-04	6.02e-04
132	9	0.08	-0.11	1.49e-03	-7.22e-05	1.06e-04	-5.83e-04
132	10	0.07	0.10	-0.01	-4.59e-04	-1.13e-04	-5.07e-04
132	11	-0.06	-0.11	1.77e-03	-6.95e-05	1.05e-04	5.25e-04
132	12	0.06	-8.29e-03	-4.67e-03	-2.95e-04	8.45e-06	2.59e-04
132	13	-0.06	-1.92e-03	-5.81e-03	-2.34e-04	-1.66e-05	-2.41e-04
132	14	0.06	-7.16e-03	-4.74e-03	-2.92e-04	-1.50e-05	-2.54e-04
132	15	-0.06	-3.05e-03	-5.74e-03	-2.37e-04	6.78e-06	2.72e-04
132	16	-0.04	0.04	-8.49e-03	-3.58e-04	-5.81e-05	2.90e-04
132	17	0.04	-0.05	-1.98e-03	-1.71e-04	4.99e-05	-2.71e-04
132	18	0.03	0.05	-8.63e-03	-3.58e-04	-5.62e-05	-2.30e-04
132	19	-0.03	-0.06	-1.84e-03	-1.70e-04	4.81e-05	2.49e-04
132	20	7.32e-04	-5.10e-03	-5.24e-03	-2.64e-04	-4.09e-06	9.20e-06
132	21	7.32e-04	-5.10e-03	-5.24e-03	-2.64e-04	-4.09e-06	9.20e-06

132	22	7.32e-04	-5.10e-03	-5.24e-03	-2.64e-04	-4.09e-06	9.20e-06
133	1	8.08e-04	4.07e-03	-0.04	1.05e-04	1.13e-05	-1.13e-05
133	2	-1.76e-04	4.03e-05	-7.65e-03	-1.51e-05	6.86e-06	8.90e-06
133	3	5.15e-04	2.72e-03	-0.03	6.80e-05	8.45e-06	-6.33e-06
133	4	0.12	-3.76e-03	-0.03	1.79e-04	6.54e-05	4.76e-04
133	5	-0.11	9.20e-03	-0.03	-4.31e-05	-4.85e-05	-4.89e-04
133	6	0.11	-1.54e-03	-0.03	1.72e-04	6.47e-05	-5.38e-04
133	7	-0.11	6.97e-03	-0.03	-3.63e-05	-4.78e-05	5.25e-04
133	8	-0.05	0.10	-0.03	2.33e-04	-1.80e-05	5.36e-04
133	9	0.05	-0.10	-0.02	-9.72e-05	3.49e-05	-5.49e-04
133	10	0.04	0.11	-0.03	2.32e-04	-1.97e-05	-4.89e-04
133	11	-0.04	-0.10	-0.02	-9.56e-05	3.66e-05	4.76e-04
133	12	0.06	-3.98e-04	-0.03	1.22e-04	3.60e-05	2.19e-04
133	13	-0.06	5.83e-03	-0.03	1.34e-05	-1.91e-05	-2.32e-04
133	14	0.05	7.34e-04	-0.03	1.18e-04	3.59e-05	-2.56e-04
133	15	-0.05	4.70e-03	-0.03	1.80e-05	-1.90e-05	2.44e-04
133	16	-0.02	0.05	-0.03	1.49e-04	-4.43e-06	2.49e-04
133	17	0.02	-0.05	-0.02	-1.28e-05	2.13e-05	-2.61e-04
133	18	0.02	0.05	-0.03	1.47e-04	-5.00e-06	-2.32e-04
133	19	-0.02	-0.05	-0.02	-1.06e-05	2.19e-05	2.19e-04
133	20	5.15e-04	2.72e-03	-0.03	6.80e-05	8.45e-06	-6.33e-06
133	21	5.15e-04	2.72e-03	-0.03	6.80e-05	8.45e-06	-6.33e-06
133	22	5.15e-04	2.72e-03	-0.03	6.80e-05	8.45e-06	-6.33e-06
134	1	0.05	0.01	-0.02	0.0	0.0	-4.10e-06
134	2	1.15e-03	3.93e-04	-7.09e-03	0.0	1.36e-06	0.0
134	3	0.04	9.47e-03	-0.01	0.0	0.0	-2.66e-06
134	4	0.16	0.08	-0.02	7.71e-06	7.25e-05	4.99e-04
134	5	-0.09	-0.06	-2.64e-03	-8.01e-06	-7.14e-05	-5.04e-04
134	6	0.16	-0.07	-0.02	8.66e-06	7.06e-05	-5.54e-04
134	7	-0.08	0.09	-2.84e-03	-8.96e-06	-6.95e-05	5.49e-04
134	8	0.01	0.15	-0.02	-8.46e-05	-4.60e-06	5.60e-04
134	9	0.06	-0.13	-0.01	8.43e-05	5.73e-06	-5.65e-04
134	10	0.06	0.16	-0.02	-8.82e-05	-5.83e-06	-5.06e-04
134	11	0.02	-0.14	-0.01	8.79e-05	6.96e-06	5.00e-04
134	12	0.10	0.04	-0.02	3.59e-06	3.55e-05	2.33e-04
134	13	-0.03	-0.02	-7.89e-03	-3.89e-06	-3.44e-05	-2.38e-04
134	14	0.09	-0.03	-0.02	3.91e-06	3.46e-05	-2.61e-04
134	15	-0.02	0.05	-7.98e-03	-4.21e-06	-3.34e-05	2.56e-04
134	16	0.02	0.08	-0.01	-4.09e-05	-1.83e-06	2.61e-04
134	17	0.05	-0.06	-0.01	4.06e-05	2.96e-06	-2.67e-04
134	18	0.05	0.08	-0.01	-4.29e-05	-2.49e-06	-2.38e-04
134	19	0.03	-0.06	-0.01	4.26e-05	3.62e-06	2.33e-04
134	20	0.04	9.47e-03	-0.01	0.0	0.0	-2.66e-06
134	21	0.04	9.47e-03	-0.01	0.0	0.0	-2.66e-06
134	22	0.04	9.47e-03	-0.01	0.0	0.0	-2.66e-06
135	1	9.10e-03	3.05e-03	-4.87e-03	0.0	2.95e-06	-4.05e-06
135	2	2.01e-03	4.54e-04	-3.75e-03	-9.16e-06	3.42e-05	0.0
135	3	6.33e-03	2.09e-03	-3.75e-03	-1.77e-06	6.52e-06	-2.62e-06
135	4	0.11	-0.06	1.40e-03	-9.85e-05	4.63e-04	4.64e-04
135	5	-0.10	0.07	-8.89e-03	9.50e-05	-4.50e-04	-4.70e-04
135	6	0.11	0.07	1.29e-03	-9.00e-05	4.57e-04	-5.14e-04
135	7	-0.10	-0.06	-8.79e-03	8.65e-05	-4.44e-04	5.09e-04
135	8	0.02	0.13	-2.37e-03	-1.61e-04	7.34e-05	5.19e-04
135	9	-9.01e-03	-0.13	-5.13e-03	1.58e-04	-6.04e-05	-5.24e-04
135	10	-0.01	0.12	-2.36e-03	-1.58e-04	8.24e-05	-4.76e-04
135	11	0.03	-0.12	-5.13e-03	1.54e-04	-6.94e-05	4.71e-04
135	12	0.06	-0.03	-1.25e-03	-4.94e-05	2.28e-04	2.17e-04
135	13	-0.04	0.03	-6.25e-03	4.59e-05	-2.15e-04	-2.22e-04
135	14	0.06	0.03	-1.30e-03	-4.36e-05	2.26e-04	-2.42e-04
135	15	-0.04	-0.03	-6.20e-03	4.00e-05	-2.13e-04	2.37e-04
135	16	0.01	0.06	-3.08e-03	-8.00e-05	3.87e-05	2.41e-04
135	17	-8.91e-04	-0.06	-4.42e-03	7.64e-05	-2.57e-05	-2.46e-04
135	18	-2.52e-03	0.06	-3.07e-03	-7.63e-05	4.40e-05	-2.26e-04
135	19	0.02	-0.05	-4.43e-03	7.28e-05	-3.10e-05	2.21e-04
135	20	6.33e-03	2.09e-03	-3.75e-03	-1.77e-06	6.52e-06	-2.62e-06
135	21	6.33e-03	2.09e-03	-3.75e-03	-1.77e-06	6.52e-06	-2.62e-06
135	22	6.33e-03	2.09e-03	-3.75e-03	-1.77e-06	6.52e-06	-2.62e-06
136	1	-1.08e-04	-0.03	-0.01	1.77e-03	5.27e-06	0.0
136	2	-1.45e-05	-1.64e-04	-7.18e-03	2.89e-06	3.67e-06	2.82e-06
136	3	-7.38e-05	-0.02	-9.51e-03	1.18e-03	4.00e-06	0.0
136	4	0.15	-0.03	-0.01	1.19e-03	8.81e-05	4.99e-04
136	5	-0.15	-8.81e-03	-8.85e-03	1.17e-03	-8.01e-05	-4.99e-04
136	6	0.16	-0.02	-9.82e-03	1.19e-03	8.77e-05	-5.47e-04
136	7	-0.16	-0.01	-9.20e-03	1.17e-03	-7.97e-05	5.47e-04
136	8	0.08	0.12	6.73e-04	1.11e-03	0.0	5.59e-04
136	9	-0.08	-0.15	-0.02	1.25e-03	8.99e-06	-5.59e-04
136	10	-0.08	0.12	1.00e-03	1.11e-03	-5.31e-06	-4.99e-04

136	11	0.08	-0.16	-0.02	1.25e-03	1.33e-05	4.99e-04
136	12	0.07	-0.02	-9.83e-03	1.19e-03	4.46e-05	2.34e-04
136	13	-0.07	-0.01	-9.19e-03	1.18e-03	-3.66e-05	-2.34e-04
136	14	0.08	-0.02	-9.66e-03	1.19e-03	4.48e-05	-2.57e-04
136	15	-0.08	-0.01	-9.37e-03	1.18e-03	-3.68e-05	2.57e-04
136	16	0.04	0.05	-4.57e-03	1.15e-03	1.59e-06	2.62e-04
136	17	-0.04	-0.08	-0.01	1.22e-03	6.42e-06	-2.62e-04
136	18	-0.04	0.05	-4.42e-03	1.15e-03	0.0	-2.34e-04
136	19	0.04	-0.08	-0.01	1.22e-03	8.38e-06	2.34e-04
136	20	-7.38e-05	-0.02	-9.51e-03	1.18e-03	4.00e-06	0.0
136	21	-7.38e-05	-0.02	-9.51e-03	1.18e-03	4.00e-06	0.0
136	22	-7.38e-05	-0.02	-9.51e-03	1.18e-03	4.00e-06	0.0
137	1	2.11e-04	-3.60e-03	-0.04	-1.29e-04	4.00e-06	-2.15e-06
137	2	-6.70e-05	-8.64e-05	-7.31e-03	4.04e-06	7.13e-06	-1.82e-06
137	3	1.32e-04	-2.41e-03	-0.03	-8.52e-05	3.62e-06	-1.68e-06
137	4	0.11	-8.89e-03	-0.03	-1.28e-04	9.77e-05	4.91e-04
137	5	-0.11	4.07e-03	-0.03	-4.28e-05	-9.05e-05	-4.94e-04
137	6	0.11	-6.65e-03	-0.03	-1.28e-04	9.57e-05	-5.36e-04
137	7	-0.11	1.82e-03	-0.03	-4.21e-05	-8.85e-05	5.33e-04
137	8	0.04	0.10	-0.02	-1.15e-04	-7.88e-06	5.46e-04
137	9	-0.04	-0.10	-0.03	-5.58e-05	1.51e-05	-5.50e-04
137	10	-0.04	0.10	-0.02	-1.16e-04	-1.05e-05	-4.91e-04
137	11	0.04	-0.11	-0.03	-5.40e-05	1.78e-05	4.87e-04
137	12	0.05	-5.53e-03	-0.03	-1.06e-04	4.92e-05	2.30e-04
137	13	-0.05	7.02e-04	-0.03	-6.47e-05	-4.19e-05	-2.33e-04
137	14	0.06	-4.39e-03	-0.03	-1.06e-04	4.84e-05	-2.52e-04
137	15	-0.06	-4.40e-04	-0.03	-6.41e-05	-4.12e-05	2.48e-04
137	16	0.02	0.05	-0.02	-9.93e-05	-1.97e-06	2.55e-04
137	17	-0.02	-0.05	-0.03	-7.10e-05	9.20e-06	-2.59e-04
137	18	-0.02	0.05	-0.02	-1.00e-04	-3.08e-06	-2.31e-04
137	19	0.02	-0.05	-0.03	-6.99e-05	1.03e-05	2.28e-04
137	20	1.32e-04	-2.41e-03	-0.03	-8.52e-05	3.62e-06	-1.68e-06
137	21	1.32e-04	-2.41e-03	-0.03	-8.52e-05	3.62e-06	-1.68e-06
137	22	1.32e-04	-2.41e-03	-0.03	-8.52e-05	3.62e-06	-1.68e-06
138	1	2.63e-06	7.09e-03	-0.03	-4.09e-04	1.68e-06	-3.79e-06
138	2	-4.56e-06	-1.20e-04	-7.22e-03	-1.77e-06	0.0	0.0
138	3	1.15e-06	4.71e-03	-0.02	-2.73e-04	1.24e-06	-2.44e-06
138	4	0.15	-4.02e-03	-0.02	-2.80e-04	6.61e-05	4.99e-04
138	5	-0.15	0.01	-0.02	-2.65e-04	-6.36e-05	-5.04e-04
138	6	0.16	-6.38e-04	-0.02	-2.80e-04	6.43e-05	-5.53e-04
138	7	-0.16	0.01	-0.02	-2.65e-04	-6.18e-05	5.48e-04
138	8	0.07	0.14	-0.01	-3.36e-04	6.69e-06	5.60e-04
138	9	-0.07	-0.13	-0.03	-2.09e-04	-4.20e-06	-5.65e-04
138	10	-0.07	0.15	-0.01	-3.39e-04	5.34e-06	-5.05e-04
138	11	0.07	-0.14	-0.03	-2.07e-04	-2.85e-06	5.00e-04
138	12	0.07	5.07e-04	-0.02	-2.76e-04	3.28e-05	2.33e-04
138	13	-0.07	8.92e-03	-0.02	-2.69e-04	-3.03e-05	-2.37e-04
138	14	0.08	2.21e-03	-0.02	-2.76e-04	3.18e-05	-2.61e-04
138	15	-0.08	7.22e-03	-0.02	-2.69e-04	-2.93e-05	2.56e-04
138	16	0.03	0.07	-0.01	-3.03e-04	3.83e-06	2.61e-04
138	17	-0.03	-0.06	-0.02	-2.42e-04	-1.34e-06	-2.66e-04
138	18	-0.03	0.07	-0.01	-3.05e-04	3.18e-06	-2.38e-04
138	19	0.03	-0.06	-0.02	-2.41e-04	0.0	2.33e-04
138	20	1.15e-06	4.71e-03	-0.02	-2.73e-04	1.24e-06	-2.44e-06
138	21	1.15e-06	4.71e-03	-0.02	-2.73e-04	1.24e-06	-2.44e-06
138	22	1.15e-06	4.71e-03	-0.02	-2.73e-04	1.24e-06	-2.44e-06
139	1	2.18e-04	-3.52e-03	2.67e-03	1.31e-04	0.0	-4.29e-06
139	2	-2.95e-05	-8.71e-06	-7.50e-03	0.0	0.0	0.0
139	3	1.42e-04	-2.35e-03	7.78e-04	8.72e-05	0.0	-2.79e-06
139	4	0.14	-0.01	4.18e-04	9.40e-05	7.43e-05	4.94e-04
139	5	-0.14	6.49e-03	1.14e-03	8.03e-05	-7.36e-05	-5.00e-04
139	6	0.15	-7.76e-03	6.17e-04	9.12e-05	7.31e-05	-5.47e-04
139	7	-0.15	3.06e-03	9.39e-04	8.32e-05	-7.24e-05	5.42e-04
139	8	0.04	0.14	6.26e-03	1.67e-05	0.0	5.54e-04
139	9	-0.04	-0.14	-4.71e-03	1.58e-04	1.36e-06	-5.59e-04
139	10	-0.04	0.14	6.44e-03	1.46e-05	-4.79e-06	-5.00e-04
139	11	0.04	-0.15	-4.89e-03	1.60e-04	5.49e-06	4.94e-04
139	12	0.07	-6.61e-03	6.04e-04	9.04e-05	3.62e-05	2.31e-04
139	13	-0.07	1.91e-03	9.51e-04	8.39e-05	-3.55e-05	-2.36e-04
139	14	0.07	-4.89e-03	7.03e-04	8.91e-05	3.57e-05	-2.58e-04
139	15	-0.07	1.84e-04	8.53e-04	8.52e-05	-3.50e-05	2.53e-04
139	16	0.02	0.06	3.44e-03	5.30e-05	0.0	2.58e-04
139	17	-0.02	-0.07	-1.88e-03	1.21e-04	0.0	-2.64e-04
139	18	-0.02	0.07	3.52e-03	5.21e-05	-2.10e-06	-2.36e-04
139	19	0.02	-0.07	-1.96e-03	1.22e-04	2.80e-06	2.30e-04
139	20	1.42e-04	-2.35e-03	7.78e-04	8.72e-05	0.0	-2.79e-06
139	21	1.42e-04	-2.35e-03	7.78e-04	8.72e-05	0.0	-2.79e-06

139	22	1.42e-04	-2.35e-03	7.78e-04	8.72e-05	0.0	-2.79e-06
140	1	-5.27e-04	-0.06	-0.02	1.49e-06	3.22e-06	1.84e-05
140	2	-2.81e-04	-9.88e-04	-7.09e-03	3.56e-06	2.64e-06	1.46e-05
140	3	-3.89e-04	-0.04	-0.01	1.47e-06	2.50e-06	1.42e-05
140	4	0.14	-0.04	-0.01	-8.02e-06	6.30e-05	5.15e-04
140	5	-0.14	-0.03	-0.01	1.10e-05	-5.80e-05	-4.87e-04
140	6	0.15	-0.04	-0.01	-8.77e-06	6.08e-05	-5.38e-04
140	7	-0.15	-0.03	-0.01	1.17e-05	-5.58e-05	5.66e-04
140	8	0.08	0.08	-2.66e-03	-6.25e-05	1.01e-05	5.77e-04
140	9	-0.08	-0.16	-0.02	6.55e-05	-5.07e-06	-5.48e-04
140	10	-0.08	0.09	-2.33e-03	-6.48e-05	7.66e-06	-4.88e-04
140	11	0.08	-0.16	-0.02	6.78e-05	-2.67e-06	5.16e-04
140	12	0.06	-0.04	-0.01	-3.16e-06	3.20e-05	2.49e-04
140	13	-0.06	-0.03	-0.01	6.09e-06	-2.70e-05	-2.21e-04
140	14	0.07	-0.04	-0.01	-3.56e-06	3.07e-05	-2.45e-04
140	15	-0.07	-0.03	-0.01	6.50e-06	-2.57e-05	2.73e-04
140	16	0.04	0.02	-7.91e-03	-2.95e-05	6.13e-06	2.78e-04
140	17	-0.04	-0.10	-0.02	3.25e-05	-1.13e-06	-2.50e-04
140	18	-0.04	0.02	-7.76e-03	-3.07e-05	4.90e-06	-2.21e-04
140	19	0.04	-0.10	-0.02	3.36e-05	0.0	2.50e-04
140	20	-3.89e-04	-0.04	-0.01	1.47e-06	2.50e-06	1.42e-05
140	21	-3.89e-04	-0.04	-0.01	1.47e-06	2.50e-06	1.42e-05
140	22	-3.89e-04	-0.04	-0.01	1.47e-06	2.50e-06	1.42e-05
141	1	2.78e-04	-7.06e-04	-0.07	-1.72e-03	4.62e-04	-3.87e-06
141	2	-7.61e-05	-3.82e-05	-7.33e-03	-1.09e-05	2.94e-06	0.0
141	3	1.75e-04	-4.76e-04	-0.05	-1.15e-03	3.08e-04	-2.51e-06
141	4	0.10	-7.17e-03	-0.05	-1.11e-03	5.27e-04	4.82e-04
141	5	-0.10	6.22e-03	-0.05	-1.19e-03	9.00e-05	-4.87e-04
141	6	0.10	-3.32e-03	-0.05	-1.12e-03	5.22e-04	-5.39e-04
141	7	-0.10	2.36e-03	-0.05	-1.19e-03	9.48e-05	5.34e-04
141	8	1.97e-03	0.10	-0.05	-1.24e-03	2.73e-04	5.42e-04
141	9	-1.62e-03	-0.10	-0.05	-1.06e-03	3.44e-04	-5.47e-04
141	10	-8.08e-03	0.10	-0.05	-1.24e-03	2.67e-04	-4.89e-04
141	11	8.44e-03	-0.10	-0.05	-1.06e-03	3.50e-04	4.84e-04
141	12	0.05	-3.70e-03	-0.05	-1.13e-03	4.14e-04	2.24e-04
141	13	-0.05	2.75e-03	-0.05	-1.17e-03	2.03e-04	-2.29e-04
141	14	0.05	-1.80e-03	-0.05	-1.13e-03	4.12e-04	-2.55e-04
141	15	-0.05	8.47e-04	-0.05	-1.17e-03	2.04e-04	2.50e-04
141	16	1.02e-03	0.05	-0.05	-1.19e-03	2.91e-04	2.53e-04
141	17	-6.72e-04	-0.05	-0.05	-1.11e-03	3.26e-04	-2.58e-04
141	18	-3.78e-03	0.05	-0.05	-1.19e-03	2.89e-04	-2.30e-04
141	19	4.13e-03	-0.05	-0.05	-1.11e-03	3.28e-04	2.25e-04
141	20	1.75e-04	-4.76e-04	-0.05	-1.15e-03	3.08e-04	-2.51e-06
141	21	1.75e-04	-4.76e-04	-0.05	-1.15e-03	3.08e-04	-2.51e-06
141	22	1.75e-04	-4.76e-04	-0.05	-1.15e-03	3.08e-04	-2.51e-06
142	1	8.48e-04	1.11e-03	-0.07	1.77e-03	-4.76e-04	-3.94e-06
142	2	-8.50e-05	-2.63e-05	-7.33e-03	9.04e-06	-2.42e-06	0.0
142	3	5.54e-04	7.33e-04	-0.05	1.18e-03	-3.17e-04	-2.55e-06
142	4	0.10	-5.68e-03	-0.05	1.04e-03	-1.87e-04	4.84e-04
142	5	-0.10	7.15e-03	-0.05	1.33e-03	-4.48e-04	-4.89e-04
142	6	0.10	-4.88e-03	-0.05	1.04e-03	-1.88e-04	-5.38e-04
142	7	-0.10	6.34e-03	-0.05	1.32e-03	-4.47e-04	5.33e-04
142	8	-8.41e-03	0.10	-0.05	7.04e-04	-2.13e-04	5.43e-04
142	9	9.52e-03	-0.10	-0.05	1.67e-03	-4.21e-04	-5.48e-04
142	10	7.52e-03	0.11	-0.05	6.94e-04	-2.11e-04	-4.90e-04
142	11	-6.41e-03	-0.10	-0.05	1.67e-03	-4.23e-04	4.85e-04
142	12	0.05	-2.34e-03	-0.05	1.11e-03	-2.54e-04	2.25e-04
142	13	-0.05	3.80e-03	-0.05	1.26e-03	-3.81e-04	-2.30e-04
142	14	0.05	-1.89e-03	-0.05	1.12e-03	-2.54e-04	-2.54e-04
142	15	-0.05	3.36e-03	-0.05	1.25e-03	-3.80e-04	2.49e-04
142	16	-3.65e-03	0.05	-0.05	9.51e-04	-2.67e-04	2.54e-04
142	17	4.76e-03	-0.05	-0.05	1.42e-03	-3.68e-04	-2.59e-04
142	18	3.85e-03	0.05	-0.05	9.47e-04	-2.66e-04	-2.31e-04
142	19	-2.74e-03	-0.05	-0.05	1.42e-03	-3.69e-04	2.26e-04
142	20	5.54e-04	7.33e-04	-0.05	1.18e-03	-3.17e-04	-2.55e-06
142	21	5.54e-04	7.33e-04	-0.05	1.18e-03	-3.17e-04	-2.55e-06
142	22	5.54e-04	7.33e-04	-0.05	1.18e-03	-3.17e-04	-2.55e-06
143	1	7.93e-03	0.03	-0.02	1.76e-03	-4.73e-04	-3.92e-06
143	2	8.51e-05	9.21e-04	-6.32e-03	4.74e-06	-1.25e-06	0.0
143	3	5.30e-03	0.02	-0.02	1.18e-03	-3.15e-04	-2.54e-06
143	4	0.14	0.04	-0.02	1.23e-03	-2.68e-04	5.04e-04
143	5	-0.13	-2.53e-03	-0.01	1.12e-03	-3.62e-04	-5.09e-04
143	6	0.13	-8.50e-03	-0.02	1.23e-03	-2.67e-04	-5.55e-04
143	7	-0.12	0.04	-0.01	1.12e-03	-3.64e-04	5.50e-04
143	8	-0.08	0.13	-0.02	1.20e-03	-3.37e-04	5.63e-04
143	9	0.09	-0.09	-6.26e-03	1.15e-03	-2.93e-04	-5.68e-04
143	10	0.08	0.13	-0.02	1.20e-03	-3.38e-04	-5.07e-04

143	11	-0.07	-0.10	-6.02e-03	1.15e-03	-2.92e-04	5.02e-04
143	12	0.07	0.03	-0.02	1.20e-03	-2.93e-04	2.35e-04
143	13	-0.06	7.90e-03	-0.01	1.15e-03	-3.38e-04	-2.40e-04
143	14	0.06	5.04e-03	-0.02	1.20e-03	-2.91e-04	-2.62e-04
143	15	-0.05	0.03	-0.01	1.15e-03	-3.39e-04	2.57e-04
143	16	-0.03	0.07	-0.02	1.19e-03	-3.26e-04	2.63e-04
143	17	0.05	-0.03	-0.01	1.16e-03	-3.04e-04	-2.68e-04
143	18	0.04	0.07	-0.02	1.19e-03	-3.26e-04	-2.39e-04
143	19	-0.03	-0.04	-0.01	1.17e-03	-3.05e-04	2.34e-04
143	20	5.30e-03	0.02	-0.02	1.18e-03	-3.15e-04	-2.54e-06
143	21	5.30e-03	0.02	-0.02	1.18e-03	-3.15e-04	-2.54e-06
143	22	5.30e-03	0.02	-0.02	1.18e-03	-3.15e-04	-2.54e-06
144	1	7.83e-03	0.03	-0.01	-1.72e-03	4.60e-04	-4.08e-06
144	2	-1.92e-04	-1.22e-04	-7.35e-03	-3.52e-05	9.44e-06	0.0
144	3	5.19e-03	0.02	-9.71e-03	-1.15e-03	3.08e-04	-2.64e-06
144	4	0.17	0.04	-0.01	-1.11e-03	3.59e-04	4.96e-04
144	5	-0.16	-3.18e-03	-6.85e-03	-1.19e-03	2.57e-04	-5.01e-04
144	6	0.16	-9.73e-03	-0.01	-1.11e-03	3.60e-04	-5.49e-04
144	7	-0.15	0.04	-6.86e-03	-1.19e-03	2.56e-04	5.44e-04
144	8	-0.08	0.15	-0.02	-1.18e-03	2.94e-04	5.56e-04
144	9	0.09	-0.12	2.73e-04	-1.12e-03	3.22e-04	-5.61e-04
144	10	0.08	0.16	-0.02	-1.19e-03	2.94e-04	-5.01e-04
144	11	-0.07	-0.13	5.72e-04	-1.11e-03	3.22e-04	4.96e-04
144	12	0.08	0.03	-0.01	-1.13e-03	3.33e-04	2.31e-04
144	13	-0.07	7.40e-03	-8.31e-03	-1.17e-03	2.83e-04	-2.36e-04
144	14	0.08	4.28e-03	-0.01	-1.13e-03	3.33e-04	-2.59e-04
144	15	-0.07	0.03	-8.32e-03	-1.17e-03	2.83e-04	2.54e-04
144	16	-0.03	0.08	-0.01	-1.17e-03	3.01e-04	2.59e-04
144	17	0.05	-0.05	-4.87e-03	-1.13e-03	3.15e-04	-2.65e-04
144	18	0.04	0.09	-0.01	-1.17e-03	3.01e-04	-2.36e-04
144	19	-0.03	-0.05	-4.73e-03	-1.13e-03	3.15e-04	2.31e-04
144	20	5.19e-03	0.02	-9.71e-03	-1.15e-03	3.08e-04	-2.64e-06
144	21	5.19e-03	0.02	-9.71e-03	-1.15e-03	3.08e-04	-2.64e-06
144	22	5.19e-03	0.02	-9.71e-03	-1.15e-03	3.08e-04	-2.64e-06
145	1	8.28e-04	1.11e-03	0.04	-1.69e-03	4.54e-04	-3.88e-06
145	2	-8.25e-05	-2.95e-05	-7.72e-03	1.09e-05	-2.93e-06	0.0
145	3	5.41e-04	7.36e-04	0.02	-1.13e-03	3.02e-04	-2.51e-06
145	4	0.14	-8.02e-03	0.02	-1.15e-03	3.80e-04	4.97e-04
145	5	-0.14	9.49e-03	0.02	-1.11e-03	2.24e-04	-5.02e-04
145	6	0.14	-6.08e-03	0.02	-1.14e-03	3.77e-04	-5.49e-04
145	7	-0.14	7.56e-03	0.02	-1.11e-03	2.27e-04	5.44e-04
145	8	-9.59e-03	0.14	0.02	-1.21e-03	3.10e-04	5.56e-04
145	9	0.01	-0.14	0.02	-1.04e-03	2.94e-04	-5.61e-04
145	10	9.22e-03	0.15	0.02	-1.22e-03	3.08e-04	-5.02e-04
145	11	-8.14e-03	-0.14	0.02	-1.04e-03	2.96e-04	4.97e-04
145	12	0.07	-3.47e-03	0.02	-1.14e-03	3.40e-04	2.32e-04
145	13	-0.07	4.94e-03	0.02	-1.12e-03	2.64e-04	-2.37e-04
145	14	0.07	-2.46e-03	0.02	-1.13e-03	3.38e-04	-2.59e-04
145	15	-0.07	3.93e-03	0.02	-1.12e-03	2.66e-04	2.54e-04
145	16	-4.22e-03	0.07	0.02	-1.17e-03	3.06e-04	2.60e-04
145	17	5.30e-03	-0.07	0.02	-1.08e-03	2.98e-04	-2.65e-04
145	18	4.67e-03	0.07	0.02	-1.17e-03	3.05e-04	-2.36e-04
145	19	-3.59e-03	-0.07	0.02	-1.08e-03	2.99e-04	2.31e-04
145	20	5.41e-04	7.36e-04	0.02	-1.13e-03	3.02e-04	-2.51e-06
145	21	5.41e-04	7.36e-04	0.02	-1.13e-03	3.02e-04	-2.51e-06
145	22	5.41e-04	7.36e-04	0.02	-1.13e-03	3.02e-04	-2.51e-06
146	1	2.60e-04	-6.95e-04	0.04	1.70e-03	-4.55e-04	-3.87e-06
146	2	-6.87e-05	-2.25e-05	-7.72e-03	-9.82e-06	2.64e-06	0.0
146	3	1.64e-04	-4.66e-04	0.02	1.13e-03	-3.03e-04	-2.51e-06
146	4	0.14	-9.65e-03	0.02	1.13e-03	-2.36e-04	4.93e-04
146	5	-0.14	8.72e-03	0.02	1.14e-03	-3.69e-04	-4.98e-04
146	6	0.14	-4.52e-03	0.02	1.13e-03	-2.38e-04	-5.46e-04
146	7	-0.14	3.58e-03	0.02	1.13e-03	-3.68e-04	5.41e-04
146	8	8.38e-04	0.14	0.02	1.06e-03	-3.00e-04	5.53e-04
146	9	-5.09e-04	-0.14	0.02	1.20e-03	-3.06e-04	-5.58e-04
146	10	-0.01	0.14	0.02	1.06e-03	-2.99e-04	-4.98e-04
146	11	0.01	-0.14	0.02	1.20e-03	-3.07e-04	4.93e-04
146	12	0.07	-4.90e-03	0.02	1.13e-03	-2.71e-04	2.30e-04
146	13	-0.07	3.97e-03	0.02	1.13e-03	-3.35e-04	-2.35e-04
146	14	0.07	-2.36e-03	0.02	1.13e-03	-2.71e-04	-2.58e-04
146	15	-0.07	1.43e-03	0.02	1.13e-03	-3.35e-04	2.53e-04
146	16	4.78e-04	0.07	0.02	1.10e-03	-3.01e-04	2.58e-04
146	17	-1.49e-04	-0.07	0.02	1.16e-03	-3.04e-04	-2.63e-04
146	18	-4.83e-03	0.07	0.02	1.10e-03	-3.01e-04	-2.35e-04
146	19	5.16e-03	-0.07	0.02	1.16e-03	-3.05e-04	2.30e-04
146	20	1.64e-04	-4.66e-04	0.02	1.13e-03	-3.03e-04	-2.51e-06
146	21	1.64e-04	-4.66e-04	0.02	1.13e-03	-3.03e-04	-2.51e-06

146	22	1.64e-04	-4.66e-04	0.02	1.13e-03	-3.03e-04	-2.51e-06
147	1	-7.24e-04	-6.59e-03	-0.03	4.14e-04	-1.11e-04	-4.07e-06
147	2	-1.26e-04	7.93e-05	-7.24e-03	8.40e-06	-2.24e-06	0.0
147	3	-5.00e-04	-4.39e-03	-0.02	2.77e-04	-7.43e-05	-2.63e-06
147	4	0.16	0.01	-0.02	2.43e-04	8.43e-06	4.94e-04
147	5	-0.16	-0.02	-0.02	3.11e-04	-1.57e-04	-5.00e-04
147	6	0.15	-0.03	-0.02	2.47e-04	5.34e-06	-5.48e-04
147	7	-0.15	0.02	-0.02	3.08e-04	-1.54e-04	5.43e-04
147	8	-0.08	0.13	-0.03	1.74e-04	-6.17e-05	5.54e-04
147	9	0.08	-0.14	-0.01	3.80e-04	-8.68e-05	-5.60e-04
147	10	0.06	0.14	-0.03	1.74e-04	-6.45e-05	-5.00e-04
147	11	-0.06	-0.15	-0.01	3.81e-04	-8.41e-05	4.95e-04
147	12	0.08	3.92e-03	-0.02	2.60e-04	-3.40e-05	2.30e-04
147	13	-0.08	-0.01	-0.02	2.94e-04	-1.15e-04	-2.36e-04
147	14	0.07	-0.02	-0.02	2.63e-04	-3.58e-05	-2.59e-04
147	15	-0.07	6.81e-03	-0.02	2.92e-04	-1.13e-04	2.53e-04
147	16	-0.04	0.06	-0.02	2.27e-04	-6.82e-05	2.59e-04
147	17	0.03	-0.07	-0.02	3.27e-04	-8.04e-05	-2.64e-04
147	18	0.03	0.07	-0.02	2.27e-04	-6.97e-05	-2.36e-04
147	19	-0.03	-0.07	-0.01	3.27e-04	-7.89e-05	2.31e-04
147	20	-5.00e-04	-4.39e-03	-0.02	2.77e-04	-7.43e-05	-2.63e-06
147	21	-5.00e-04	-4.39e-03	-0.02	2.77e-04	-7.43e-05	-2.63e-06
147	22	-5.00e-04	-4.39e-03	-0.02	2.77e-04	-7.43e-05	-2.63e-06
148	1	1.82e-03	3.73e-03	2.66e-03	-1.17e-04	3.14e-05	-4.07e-06
148	2	-1.25e-04	-3.17e-05	-7.51e-03	2.23e-06	0.0	0.0
148	3	1.20e-03	2.48e-03	7.69e-04	-7.80e-05	2.09e-05	-2.63e-06
148	4	0.15	0.01	-6.76e-04	-5.48e-05	8.24e-05	4.97e-04
148	5	-0.15	-9.94e-03	2.21e-03	-1.01e-04	-4.07e-05	-5.03e-04
148	6	0.14	-0.01	-6.85e-04	-5.60e-05	8.17e-05	-5.51e-04
148	7	-0.14	0.02	2.22e-03	-1.00e-04	-3.99e-05	5.45e-04
148	8	-0.05	0.14	-4.53e-03	-1.23e-04	1.43e-05	5.57e-04
148	9	0.05	-0.14	6.07e-03	-3.32e-05	2.75e-05	-5.63e-04
148	10	0.04	0.15	-4.69e-03	-1.26e-04	1.21e-05	-5.03e-04
148	11	-0.04	-0.14	6.23e-03	-3.05e-05	2.97e-05	4.98e-04
148	12	0.08	8.31e-03	6.28e-05	-6.67e-05	5.06e-05	2.32e-04
148	13	-0.07	-3.34e-03	1.48e-03	-8.94e-05	-8.86e-06	-2.37e-04
148	14	0.07	-5.33e-03	5.86e-05	-6.77e-05	5.05e-05	-2.60e-04
148	15	-0.07	0.01	1.48e-03	-8.84e-05	-8.78e-06	2.55e-04
148	16	-0.02	0.07	-1.80e-03	-9.95e-05	1.76e-05	2.60e-04
148	17	0.02	-0.06	3.34e-03	-5.66e-05	2.41e-05	-2.65e-04
148	18	0.02	0.07	-1.88e-03	-1.01e-04	1.68e-05	-2.37e-04
148	19	-0.02	-0.07	3.42e-03	-5.49e-05	2.50e-05	2.32e-04
148	20	1.20e-03	2.48e-03	7.69e-04	-7.80e-05	2.09e-05	-2.63e-06
148	21	1.20e-03	2.48e-03	7.69e-04	-7.80e-05	2.09e-05	-2.63e-06
148	22	1.20e-03	2.48e-03	7.69e-04	-7.80e-05	2.09e-05	-2.63e-06
149	1	0.01	0.05	-0.02	-1.26e-06	0.0	-4.07e-06
149	2	-4.78e-04	-1.19e-03	-7.09e-03	-3.63e-05	9.73e-06	0.0
149	3	9.66e-03	0.03	-0.01	-5.68e-06	1.47e-06	-2.64e-06
149	4	0.16	0.05	-0.02	-5.39e-05	9.73e-05	4.89e-04
149	5	-0.14	0.01	-0.01	4.26e-05	-9.43e-05	-4.94e-04
149	6	0.15	7.40e-03	-0.02	-4.96e-05	9.32e-05	-5.42e-04
149	7	-0.13	0.06	-0.01	3.83e-05	-9.02e-05	5.37e-04
149	8	-0.08	0.15	-0.02	-1.32e-04	2.20e-05	5.49e-04
149	9	0.09	-0.09	-3.05e-03	1.20e-04	-1.91e-05	-5.54e-04
149	10	0.08	0.16	-0.02	-1.32e-04	1.72e-05	-4.94e-04
149	11	-0.06	-0.09	-2.77e-03	1.21e-04	-1.42e-05	4.89e-04
149	12	0.08	0.04	-0.01	-2.95e-05	4.82e-05	2.28e-04
149	13	-0.06	0.02	-0.01	1.81e-05	-4.53e-05	-2.33e-04
149	14	0.07	0.02	-0.01	-2.66e-05	4.57e-05	-2.56e-04
149	15	-0.06	0.05	-0.01	1.52e-05	-4.27e-05	2.51e-04
149	16	-0.03	0.09	-0.02	-6.72e-05	1.15e-05	2.56e-04
149	17	0.05	-0.02	-8.10e-03	5.59e-05	-8.55e-06	-2.62e-04
149	18	0.04	0.09	-0.02	-6.65e-05	8.78e-06	-2.33e-04
149	19	-0.02	-0.03	-7.97e-03	5.51e-05	-5.84e-06	2.28e-04
149	20	9.66e-03	0.03	-0.01	-5.68e-06	1.47e-06	-2.64e-06
149	21	9.66e-03	0.03	-0.01	-5.68e-06	1.47e-06	-2.64e-06
149	22	9.66e-03	0.03	-0.01	-5.68e-06	1.47e-06	-2.64e-06
150	1	1.87e-03	7.13e-03	-8.08e-03	3.95e-04	-1.06e-04	-4.05e-06
150	2	2.31e-05	5.97e-05	-6.81e-03	-1.07e-06	0.0	0.0
150	3	1.25e-03	4.76e-03	-6.29e-03	2.63e-04	-7.05e-05	-2.63e-06
150	4	0.12	-0.01	-3.88e-03	2.69e-04	1.83e-05	4.90e-04
150	5	-0.12	0.02	-8.70e-03	2.57e-04	-1.59e-04	-4.96e-04
150	6	0.13	0.02	-3.89e-03	2.65e-04	1.73e-05	-5.39e-04
150	7	-0.13	-9.59e-03	-8.70e-03	2.61e-04	-1.58e-04	5.34e-04
150	8	0.07	0.11	2.20e-03	1.86e-04	-7.55e-05	5.47e-04
150	9	-0.07	-0.10	-0.01	3.40e-04	-6.55e-05	-5.52e-04
150	10	-0.06	0.11	2.45e-03	1.84e-04	-7.99e-05	-4.93e-04

150	11	0.07	-0.10	-0.02	3.42e-04	-6.11e-05	4.88e-04
150	12	0.06	-4.16e-03	-5.11e-03	2.66e-04	-2.76e-05	2.29e-04
150	13	-0.05	0.01	-7.47e-03	2.60e-04	-1.13e-04	-2.35e-04
150	14	0.06	0.01	-5.12e-03	2.64e-04	-2.77e-05	-2.54e-04
150	15	-0.06	-1.99e-03	-7.47e-03	2.62e-04	-1.13e-04	2.49e-04
150	16	0.03	0.06	-2.17e-03	2.26e-04	-7.29e-05	2.55e-04
150	17	-0.03	-0.05	-0.01	3.00e-04	-6.81e-05	-2.60e-04
150	18	-0.03	0.06	-2.06e-03	2.25e-04	-7.49e-05	-2.33e-04
150	19	0.03	-0.05	-0.01	3.01e-04	-6.61e-05	2.28e-04
150	20	1.25e-03	4.76e-03	-6.29e-03	2.63e-04	-7.05e-05	-2.63e-06
150	21	1.25e-03	4.76e-03	-6.29e-03	2.63e-04	-7.05e-05	-2.63e-06
150	22	1.25e-03	4.76e-03	-6.29e-03	2.63e-04	-7.05e-05	-2.63e-06
151	1	-6.88e-03	-0.03	-0.02	-1.70e-03	4.54e-04	-4.05e-06
151	2	-7.09e-05	-3.34e-04	-7.04e-03	1.21e-05	-3.22e-06	0.0
151	3	-4.60e-03	-0.02	-0.02	-1.13e-03	3.02e-04	-2.62e-06
151	4	0.12	-0.04	-0.01	-1.14e-03	3.55e-04	4.96e-04
151	5	-0.13	4.37e-03	-0.02	-1.12e-03	2.50e-04	-5.01e-04
151	6	0.13	6.67e-05	-0.01	-1.14e-03	3.52e-04	-5.49e-04
151	7	-0.14	-0.03	-0.02	-1.12e-03	2.53e-04	5.44e-04
151	8	0.07	0.09	-6.40e-03	-1.20e-03	3.14e-04	5.56e-04
151	9	-0.08	-0.13	-0.03	-1.05e-03	2.91e-04	-5.61e-04
151	10	-0.08	0.09	-6.10e-03	-1.21e-03	3.11e-04	-5.01e-04
151	11	0.07	-0.13	-0.03	-1.05e-03	2.93e-04	4.96e-04
151	12	0.05	-0.03	-0.01	-1.13e-03	3.28e-04	2.31e-04
151	13	-0.06	-6.81e-03	-0.02	-1.12e-03	2.77e-04	-2.36e-04
151	14	0.06	-8.90e-03	-0.01	-1.13e-03	3.26e-04	-2.59e-04
151	15	-0.07	-0.02	-0.02	-1.12e-03	2.78e-04	2.54e-04
151	16	0.03	0.04	-0.01	-1.16e-03	3.08e-04	2.59e-04
151	17	-0.04	-0.07	-0.02	-1.09e-03	2.97e-04	-2.65e-04
151	18	-0.04	0.04	-0.01	-1.17e-03	3.07e-04	-2.36e-04
151	19	0.03	-0.07	-0.02	-1.09e-03	2.98e-04	2.31e-04
151	20	-4.60e-03	-0.02	-0.02	-1.13e-03	3.02e-04	-2.62e-06
151	21	-4.60e-03	-0.02	-0.02	-1.13e-03	3.02e-04	-2.62e-06
151	22	-4.60e-03	-0.02	-0.02	-1.13e-03	3.02e-04	-2.62e-06
152	1	-1.24e-03	-8.61e-03	-4.87e-03	0.0	0.0	-4.49e-06
152	2	-7.07e-04	-2.07e-03	-3.75e-03	3.46e-05	-9.19e-06	0.0
152	3	-9.21e-04	-6.02e-03	-3.75e-03	4.41e-06	-1.55e-06	-2.91e-06
152	4	0.13	0.01	-5.16e-03	-1.34e-04	1.81e-04	4.60e-04
152	5	-0.13	-0.02	-2.33e-03	1.43e-04	-1.84e-04	-4.66e-04
152	6	0.12	-0.03	-5.17e-03	-1.28e-04	1.70e-04	-5.19e-04
152	7	-0.12	0.02	-2.33e-03	1.37e-04	-1.73e-04	5.13e-04
152	8	-0.07	0.09	-8.74e-03	-4.39e-04	1.04e-04	5.18e-04
152	9	0.07	-0.11	1.24e-03	4.48e-04	-1.07e-04	-5.24e-04
152	10	0.06	0.10	-8.88e-03	-4.49e-04	9.11e-05	-4.69e-04
152	11	-0.06	-0.11	1.38e-03	4.58e-04	-9.42e-05	4.63e-04
152	12	0.06	2.21e-03	-4.44e-03	-6.34e-05	8.81e-05	2.13e-04
152	13	-0.06	-0.01	-3.05e-03	7.23e-05	-9.12e-05	-2.19e-04
152	14	0.05	-0.02	-4.44e-03	-5.98e-05	8.04e-05	-2.47e-04
152	15	-0.06	4.56e-03	-3.05e-03	6.87e-05	-8.35e-05	2.41e-04
152	16	-0.04	0.04	-6.17e-03	-2.11e-04	5.01e-05	2.42e-04
152	17	0.03	-0.05	-1.33e-03	2.20e-04	-5.32e-05	-2.48e-04
152	18	0.03	0.05	-6.23e-03	-2.15e-04	4.21e-05	-2.21e-04
152	19	-0.03	-0.06	-1.26e-03	2.23e-04	-4.52e-05	2.15e-04
152	20	-9.21e-04	-6.02e-03	-3.75e-03	4.41e-06	-1.55e-06	-2.91e-06
152	21	-9.21e-04	-6.02e-03	-3.75e-03	4.41e-06	-1.55e-06	-2.91e-06
152	22	-9.21e-04	-6.02e-03	-3.75e-03	4.41e-06	-1.55e-06	-2.91e-06
153	1	1.83e-03	3.68e-03	-0.04	2.07e-04	-5.54e-05	-4.31e-06
153	2	-1.12e-04	3.13e-05	-7.69e-03	-2.89e-05	7.74e-06	0.0
153	3	1.21e-03	2.45e-03	-0.03	1.34e-04	-3.59e-05	-2.79e-06
153	4	0.12	0.01	-0.03	3.17e-04	-1.42e-05	5.18e-04
153	5	-0.11	-9.14e-03	-0.03	-4.83e-05	-5.76e-05	-5.24e-04
153	6	0.11	-0.01	-0.03	3.09e-04	-1.81e-05	-5.68e-04
153	7	-0.11	0.02	-0.03	-4.11e-05	-5.37e-05	5.63e-04
153	8	-0.05	0.10	-0.03	5.60e-04	-1.67e-04	5.77e-04
153	9	0.05	-0.10	-0.02	-2.92e-04	9.48e-05	-5.82e-04
153	10	0.04	0.11	-0.03	5.67e-04	-1.70e-04	-5.20e-04
153	11	-0.04	-0.10	-0.02	-2.99e-04	9.77e-05	5.15e-04
153	12	0.06	7.88e-03	-0.03	2.24e-04	-2.57e-05	2.43e-04
153	13	-0.05	-2.97e-03	-0.03	4.46e-05	-4.61e-05	-2.48e-04
153	14	0.05	-4.80e-03	-0.03	2.19e-04	-2.71e-05	-2.67e-04
153	15	-0.05	9.71e-03	-0.03	4.94e-05	-4.47e-05	2.62e-04
153	16	-0.02	0.05	-0.03	3.41e-04	-9.95e-05	2.69e-04
153	17	0.02	-0.05	-0.02	-7.32e-05	2.77e-05	-2.75e-04
153	18	0.02	0.05	-0.03	3.43e-04	-1.00e-04	-2.46e-04
153	19	-0.02	-0.05	-0.02	-7.48e-05	2.85e-05	2.40e-04
153	20	1.21e-03	2.45e-03	-0.03	1.34e-04	-3.59e-05	-2.79e-06
153	21	1.21e-03	2.45e-03	-0.03	1.34e-04	-3.59e-05	-2.79e-06

153	22	1.21e-03	2.45e-03	-0.03	1.34e-04	-3.59e-05	-2.79e-06
154	1	-0.02	-5.98e-03	-0.02	-4.73e-04	1.76e-03	-4.08e-06
154	2	-9.82e-04	-3.59e-04	-6.32e-03	-1.26e-06	4.70e-06	0.0
154	3	-0.02	-4.03e-03	-0.02	-3.15e-04	1.18e-03	-2.64e-06
154	4	0.09	-0.08	-5.99e-03	-2.94e-04	1.16e-03	5.02e-04
154	5	-0.13	0.07	-0.02	-3.36e-04	1.20e-03	-5.07e-04
154	6	0.09	0.07	-6.19e-03	-2.95e-04	1.16e-03	-5.56e-04
154	7	-0.13	-0.08	-0.02	-3.35e-04	1.20e-03	5.50e-04
154	8	1.16e-03	0.13	-0.01	-3.72e-04	1.17e-03	5.63e-04
154	9	-0.03	-0.14	-0.02	-2.58e-04	1.19e-03	-5.69e-04
154	10	-0.04	0.12	-0.01	-3.75e-04	1.16e-03	-5.07e-04
154	11	4.70e-03	-0.13	-0.02	-2.55e-04	1.19e-03	5.01e-04
154	12	0.04	-0.04	-0.01	-3.05e-04	1.17e-03	2.34e-04
154	13	-0.07	0.03	-0.02	-3.25e-04	1.19e-03	-2.39e-04
154	14	0.04	0.03	-0.01	-3.06e-04	1.17e-03	-2.62e-04
154	15	-0.07	-0.04	-0.02	-3.25e-04	1.19e-03	2.57e-04
154	16	-8.34e-03	0.06	-0.01	-3.43e-04	1.17e-03	2.63e-04
154	17	-0.03	-0.07	-0.02	-2.88e-04	1.18e-03	-2.69e-04
154	18	-0.03	0.05	-0.01	-3.44e-04	1.17e-03	-2.39e-04
154	19	-6.59e-03	-0.06	-0.02	-2.86e-04	1.18e-03	2.33e-04
154	20	-0.02	-4.03e-03	-0.02	-3.15e-04	1.18e-03	-2.64e-06
154	21	-0.02	-4.03e-03	-0.02	-3.15e-04	1.18e-03	-2.64e-06
154	22	-0.02	-4.03e-03	-0.02	-3.15e-04	1.18e-03	-2.64e-06
155	1	-6.08e-03	-2.12e-03	-8.07e-03	-1.06e-04	3.95e-04	-4.08e-06
155	2	-2.05e-04	1.84e-05	-6.82e-03	0.0	-1.06e-06	0.0
155	3	-4.08e-03	-1.41e-03	-6.29e-03	-7.05e-05	2.63e-04	-2.64e-06
155	4	0.10	0.06	-0.02	-6.32e-05	3.43e-04	4.87e-04
155	5	-0.11	-0.06	2.48e-03	-7.77e-05	1.83e-04	-4.92e-04
155	6	0.10	-0.07	-0.01	-6.18e-05	3.41e-04	-5.39e-04
155	7	-0.11	0.07	2.31e-03	-7.91e-05	1.85e-04	5.34e-04
155	8	-0.03	0.12	-8.64e-03	-1.56e-04	2.59e-04	5.48e-04
155	9	0.02	-0.12	-3.93e-03	1.53e-05	2.67e-04	-5.53e-04
155	10	0.01	0.13	-8.64e-03	-1.60e-04	2.57e-04	-4.91e-04
155	11	-0.02	-0.13	-3.93e-03	1.88e-05	2.69e-04	4.86e-04
155	12	0.05	0.03	-0.01	-6.70e-05	3.02e-04	2.27e-04
155	13	-0.06	-0.03	-2.03e-03	-7.39e-05	2.24e-04	-2.32e-04
155	14	0.05	-0.04	-0.01	-6.64e-05	3.01e-04	-2.55e-04
155	15	-0.05	0.03	-2.11e-03	-7.45e-05	2.25e-04	2.50e-04
155	16	-0.01	0.06	-7.44e-03	-1.12e-04	2.61e-04	2.56e-04
155	17	6.52e-03	-0.06	-5.14e-03	-2.91e-05	2.65e-04	-2.61e-04
155	18	3.85e-03	0.06	-7.43e-03	-1.14e-04	2.60e-04	-2.31e-04
155	19	-0.01	-0.06	-5.14e-03	-2.72e-05	2.66e-04	2.26e-04
155	20	-4.08e-03	-1.41e-03	-6.29e-03	-7.05e-05	2.63e-04	-2.64e-06
155	21	-4.08e-03	-1.41e-03	-6.29e-03	-7.05e-05	2.63e-04	-2.64e-06
155	22	-4.08e-03	-1.41e-03	-6.29e-03	-7.05e-05	2.63e-04	-2.64e-06
156	1	-6.85e-03	-0.03	-0.01	1.71e-03	-4.57e-04	-4.07e-06
156	2	-3.99e-05	-2.27e-04	-7.15e-03	-1.28e-06	0.0	0.0
156	3	-4.57e-03	-0.02	-9.47e-03	1.14e-03	-3.05e-04	-2.63e-06
156	4	0.14	-0.04	-6.68e-03	1.13e-03	-2.47e-04	4.97e-04
156	5	-0.15	5.68e-03	-0.01	1.14e-03	-3.63e-04	-5.02e-04
156	6	0.16	-6.39e-04	-6.67e-03	1.13e-03	-2.49e-04	-5.51e-04
156	7	-0.17	-0.03	-0.01	1.14e-03	-3.61e-04	5.46e-04
156	8	0.07	0.12	3.76e-04	1.07e-03	-2.96e-04	5.57e-04
156	9	-0.08	-0.15	-0.02	1.20e-03	-3.13e-04	-5.63e-04
156	10	-0.08	0.12	6.48e-04	1.07e-03	-2.99e-04	-5.03e-04
156	11	0.07	-0.16	-0.02	1.20e-03	-3.10e-04	4.98e-04
156	12	0.07	-0.03	-8.11e-03	1.14e-03	-2.77e-04	2.32e-04
156	13	-0.07	-6.09e-03	-0.01	1.14e-03	-3.33e-04	-2.37e-04
156	14	0.07	-9.17e-03	-8.11e-03	1.13e-03	-2.78e-04	-2.60e-04
156	15	-0.08	-0.02	-0.01	1.14e-03	-3.32e-04	2.55e-04
156	16	0.03	0.05	-4.69e-03	1.11e-03	-3.01e-04	2.60e-04
156	17	-0.04	-0.08	-0.01	1.17e-03	-3.09e-04	-2.66e-04
156	18	-0.04	0.05	-4.57e-03	1.10e-03	-3.02e-04	-2.37e-04
156	19	0.03	-0.08	-0.01	1.17e-03	-3.07e-04	2.32e-04
156	20	-4.57e-03	-0.02	-9.47e-03	1.14e-03	-3.05e-04	-2.63e-06
156	21	-4.57e-03	-0.02	-9.47e-03	1.14e-03	-3.05e-04	-2.63e-06
156	22	-4.57e-03	-0.02	-9.47e-03	1.14e-03	-3.05e-04	-2.63e-06
157	1	-7.35e-04	-3.39e-03	-0.04	-1.25e-04	3.35e-05	-4.08e-06
157	2	-4.74e-05	-8.83e-05	-7.24e-03	2.04e-06	0.0	0.0
157	3	-4.97e-04	-2.27e-03	-0.03	-8.31e-05	2.23e-05	-2.64e-06
157	4	0.11	-0.02	-0.03	-7.51e-05	1.01e-04	5.01e-04
157	5	-0.11	0.01	-0.03	-9.12e-05	-5.67e-05	-5.06e-04
157	6	0.11	4.89e-03	-0.03	-7.66e-05	9.93e-05	-5.59e-04
157	7	-0.11	-9.43e-03	-0.03	-8.97e-05	-5.48e-05	5.53e-04
157	8	0.04	0.10	-0.02	-1.35e-04	1.53e-05	5.63e-04
157	9	-0.04	-0.10	-0.03	-3.16e-05	2.93e-05	-5.68e-04
157	10	-0.04	0.10	-0.02	-1.36e-04	1.31e-05	-5.08e-04

157	11	0.04	-0.11	-0.03	-2.99e-05	3.15e-05	5.03e-04
157	12	0.05	-8.35e-03	-0.03	-7.93e-05	6.05e-05	2.33e-04
157	13	-0.05	3.81e-03	-0.03	-8.70e-05	-1.60e-05	-2.38e-04
157	14	0.05	1.11e-03	-0.03	-8.00e-05	5.97e-05	-2.64e-04
157	15	-0.06	-5.65e-03	-0.03	-8.63e-05	-1.52e-05	2.59e-04
157	16	0.02	0.05	-0.02	-1.08e-04	1.89e-05	2.63e-04
157	17	-0.02	-0.05	-0.03	-5.81e-05	2.56e-05	-2.68e-04
157	18	-0.02	0.05	-0.02	-1.09e-04	1.79e-05	-2.39e-04
157	19	0.02	-0.05	-0.03	-5.74e-05	2.66e-05	2.34e-04
157	20	-4.97e-04	-2.27e-03	-0.03	-8.31e-05	2.23e-05	-2.64e-06
157	21	-4.97e-04	-2.27e-03	-0.03	-8.31e-05	2.23e-05	-2.64e-06
157	22	-4.97e-04	-2.27e-03	-0.03	-8.31e-05	2.23e-05	-2.64e-06
158	1	1.81e-03	6.99e-03	-0.03	-3.95e-04	1.06e-04	-4.07e-06
158	2	-2.77e-05	-1.41e-04	-7.21e-03	-2.10e-06	0.0	0.0
158	3	1.20e-03	4.64e-03	-0.02	-2.64e-04	7.07e-05	-2.63e-06
158	4	0.15	-0.02	-0.02	-2.59e-04	1.47e-04	4.94e-04
158	5	-0.15	0.02	-0.02	-2.69e-04	-5.90e-06	-4.99e-04
158	6	0.16	0.02	-0.02	-2.62e-04	1.46e-04	-5.46e-04
158	7	-0.16	-8.74e-03	-0.02	-2.65e-04	-5.00e-06	5.40e-04
158	8	0.07	0.14	-0.01	-3.32e-04	6.85e-05	5.53e-04
158	9	-0.06	-0.13	-0.03	-1.96e-04	7.29e-05	-5.58e-04
158	10	-0.06	0.15	-0.01	-3.34e-04	6.39e-05	-4.99e-04
158	11	0.07	-0.14	-0.03	-1.94e-04	7.74e-05	4.93e-04
158	12	0.07	-5.01e-03	-0.02	-2.61e-04	1.08e-04	2.31e-04
158	13	-0.07	0.01	-0.02	-2.66e-04	3.36e-05	-2.36e-04
158	14	0.08	0.01	-0.02	-2.63e-04	1.08e-04	-2.57e-04
158	15	-0.08	-1.65e-03	-0.02	-2.65e-04	3.38e-05	2.52e-04
158	16	0.03	0.07	-0.02	-2.97e-04	6.96e-05	2.58e-04
158	17	-0.03	-0.06	-0.02	-2.31e-04	7.18e-05	-2.63e-04
158	18	-0.03	0.07	-0.02	-2.98e-04	6.75e-05	-2.35e-04
158	19	0.03	-0.06	-0.02	-2.30e-04	7.39e-05	2.30e-04
158	20	1.20e-03	4.64e-03	-0.02	-2.64e-04	7.07e-05	-2.63e-06
158	21	1.20e-03	4.64e-03	-0.02	-2.64e-04	7.07e-05	-2.63e-06
158	22	1.20e-03	4.64e-03	-0.02	-2.64e-04	7.07e-05	-2.63e-06
159	1	-7.36e-04	-3.31e-03	2.67e-03	1.26e-04	-3.38e-05	-4.07e-06
159	2	-2.64e-05	-2.18e-05	-7.50e-03	0.0	0.0	0.0
159	3	-4.94e-04	-2.21e-03	7.80e-04	8.40e-05	-2.25e-05	-2.63e-06
159	4	0.14	-0.02	2.28e-03	7.96e-05	4.83e-05	4.98e-04
159	5	-0.14	0.01	-7.17e-04	8.83e-05	-9.33e-05	-5.03e-04
159	6	0.15	3.92e-03	2.28e-03	8.63e-05	4.67e-05	-5.52e-04
159	7	-0.15	-8.34e-03	-7.22e-04	8.16e-05	-9.18e-05	5.47e-04
159	8	0.04	0.14	6.07e-03	1.64e-05	-2.52e-05	5.59e-04
159	9	-0.04	-0.14	-4.51e-03	1.52e-04	-1.99e-05	-5.64e-04
159	10	-0.04	0.14	6.22e-03	1.41e-05	-2.66e-05	-5.04e-04
159	11	0.04	-0.15	-4.66e-03	1.54e-04	-1.85e-05	4.99e-04
159	12	0.07	-9.23e-03	1.51e-03	8.19e-05	1.18e-05	2.32e-04
159	13	-0.07	4.81e-03	4.73e-05	8.61e-05	-5.69e-05	-2.37e-04
159	14	0.07	6.74e-04	1.51e-03	8.51e-05	1.11e-05	-2.61e-04
159	15	-0.07	-5.10e-03	4.73e-05	8.29e-05	-5.62e-05	2.56e-04
159	16	0.02	0.07	3.35e-03	5.12e-05	-2.38e-05	2.61e-04
159	17	-0.02	-0.07	-1.79e-03	1.17e-04	-2.13e-05	-2.66e-04
159	18	-0.02	0.07	3.41e-03	5.01e-05	-2.45e-05	-2.38e-04
159	19	0.02	-0.07	-1.85e-03	1.18e-04	-2.06e-05	2.32e-04
159	20	-4.94e-04	-2.21e-03	7.80e-04	8.40e-05	-2.25e-05	-2.63e-06
159	21	-4.94e-04	-2.21e-03	7.80e-04	8.40e-05	-2.25e-05	-2.63e-06
159	22	-4.94e-04	-2.21e-03	7.80e-04	8.40e-05	-2.25e-05	-2.63e-06
160	1	-0.01	-0.05	-0.02	0.0	0.0	-4.02e-06
160	2	-3.29e-04	-1.30e-03	-7.09e-03	1.35e-06	0.0	0.0
160	3	-9.73e-03	-0.04	-0.01	0.0	0.0	-2.61e-06
160	4	0.13	-0.06	-0.01	7.47e-06	8.75e-05	4.99e-04
160	5	-0.14	-0.01	-0.02	-6.27e-06	-8.79e-05	-5.04e-04
160	6	0.14	-0.02	-0.01	4.45e-06	8.67e-05	-5.53e-04
160	7	-0.16	-0.05	-0.02	-3.26e-06	-8.71e-05	5.48e-04
160	8	0.07	0.09	-2.98e-03	-6.93e-05	-6.66e-06	5.59e-04
160	9	-0.09	-0.16	-0.02	7.05e-05	6.28e-06	-5.64e-04
160	10	-0.08	0.09	-2.69e-03	-7.13e-05	-1.06e-05	-5.05e-04
160	11	0.06	-0.16	-0.02	7.25e-05	1.02e-05	5.00e-04
160	12	0.05	-0.05	-0.01	3.84e-06	4.22e-05	2.33e-04
160	13	-0.07	-0.03	-0.01	-2.65e-06	-4.26e-05	-2.38e-04
160	14	0.06	-0.03	-0.01	2.47e-06	4.22e-05	-2.61e-04
160	15	-0.08	-0.04	-0.01	-1.28e-06	-4.26e-05	2.56e-04
160	16	0.03	0.02	-8.06e-03	-3.33e-05	-3.35e-06	2.61e-04
160	17	-0.05	-0.10	-0.02	3.45e-05	2.98e-06	-2.66e-04
160	18	-0.04	0.02	-7.93e-03	-3.41e-05	-5.06e-06	-2.38e-04
160	19	0.02	-0.10	-0.02	3.53e-05	4.69e-06	2.33e-04
160	20	-9.73e-03	-0.04	-0.01	0.0	0.0	-2.61e-06
160	21	-9.73e-03	-0.04	-0.01	0.0	0.0	-2.61e-06

160	22	-9.73e-03	-0.04	-0.01	0.0	0.0	-2.61e-06
161	1	5.19e-05	-6.02e-04	-0.07	-1.55e-03	8.93e-04	-4.31e-06
161	2	-7.69e-05	-3.98e-05	-7.33e-03	-1.01e-05	6.38e-06	1.59e-06
161	3	2.44e-05	-4.06e-04	-0.05	-1.03e-03	5.96e-04	-2.66e-06
161	4	0.10	-7.55e-03	-0.05	-1.00e-03	8.23e-04	4.91e-04
161	5	-0.10	6.74e-03	-0.05	-1.06e-03	3.69e-04	-4.96e-04
161	6	0.10	-2.02e-03	-0.05	-1.00e-03	8.18e-04	-5.55e-04
161	7	-0.10	1.21e-03	-0.05	-1.06e-03	3.74e-04	5.49e-04
161	8	1.27e-03	0.10	-0.05	-1.12e-03	5.78e-04	5.52e-04
161	9	-1.22e-03	-0.10	-0.05	-9.48e-04	6.14e-04	-5.58e-04
161	10	-7.89e-03	0.10	-0.05	-1.12e-03	5.70e-04	-4.99e-04
161	11	7.94e-03	-0.10	-0.05	-9.44e-04	6.22e-04	4.94e-04
161	12	0.05	-3.85e-03	-0.05	-1.02e-03	7.06e-04	2.27e-04
161	13	-0.05	3.04e-03	-0.05	-1.05e-03	4.86e-04	-2.33e-04
161	14	0.05	-1.16e-03	-0.05	-1.02e-03	7.04e-04	-2.64e-04
161	15	-0.05	3.43e-04	-0.05	-1.05e-03	4.88e-04	2.58e-04
161	16	6.12e-04	0.05	-0.05	-1.07e-03	5.87e-04	2.58e-04
161	17	-5.63e-04	-0.05	-0.05	-9.92e-04	6.05e-04	-2.63e-04
161	18	-3.77e-03	0.05	-0.05	-1.07e-03	5.84e-04	-2.35e-04
161	19	3.82e-03	-0.05	-0.05	-9.90e-04	6.08e-04	2.30e-04
161	20	2.44e-05	-4.06e-04	-0.05	-1.03e-03	5.96e-04	-2.66e-06
161	21	2.44e-05	-4.06e-04	-0.05	-1.03e-03	5.96e-04	-2.66e-06
161	22	2.44e-05	-4.06e-04	-0.05	-1.03e-03	5.96e-04	-2.66e-06
162	1	1.09e-03	1.02e-03	-0.07	1.54e-03	-8.89e-04	3.30e-06
162	2	-8.01e-05	-2.40e-05	-7.33e-03	1.54e-05	-6.79e-06	-1.33e-05
162	3	7.15e-04	6.79e-04	-0.05	1.03e-03	-5.93e-04	0.0
162	4	0.10	-5.95e-03	-0.05	9.84e-04	-5.03e-04	5.21e-04
162	5	-0.10	7.31e-03	-0.05	1.07e-03	-6.84e-04	-5.20e-04
162	6	0.10	-6.25e-03	-0.05	9.82e-04	-5.02e-04	-5.57e-04
162	7	-0.10	7.60e-03	-0.05	1.07e-03	-6.85e-04	5.57e-04
162	8	-7.70e-03	0.10	-0.05	7.11e-04	-5.65e-04	5.84e-04
162	9	9.13e-03	-0.10	-0.05	1.34e-03	-6.22e-04	-5.83e-04
162	10	7.43e-03	0.11	-0.05	7.00e-04	-5.62e-04	-5.09e-04
162	11	-6.00e-03	-0.10	-0.05	1.35e-03	-6.25e-04	5.10e-04
162	12	0.05	-2.48e-03	-0.05	1.01e-03	-5.50e-04	2.46e-04
162	13	-0.05	3.84e-03	-0.05	1.05e-03	-6.37e-04	-2.45e-04
162	14	0.05	-2.56e-03	-0.05	1.00e-03	-5.48e-04	-2.60e-04
162	15	-0.05	3.92e-03	-0.05	1.05e-03	-6.38e-04	2.61e-04
162	16	-3.23e-03	0.05	-0.05	8.74e-04	-5.80e-04	2.76e-04
162	17	4.66e-03	-0.05	-0.05	1.18e-03	-6.07e-04	-2.76e-04
162	18	3.90e-03	0.05	-0.05	8.69e-04	-5.78e-04	-2.36e-04
162	19	-2.47e-03	-0.05	-0.05	1.19e-03	-6.09e-04	2.37e-04
162	20	7.15e-04	6.79e-04	-0.05	1.03e-03	-5.93e-04	0.0
162	21	7.15e-04	6.79e-04	-0.05	1.03e-03	-5.93e-04	0.0
162	22	7.15e-04	6.79e-04	-0.05	1.03e-03	-5.93e-04	0.0
163	1	0.01	0.02	-0.02	1.54e-03	-8.92e-04	-1.97e-05
163	2	3.78e-04	7.47e-04	-6.51e-03	2.59e-06	-1.43e-06	-2.32e-05
163	3	9.85e-03	0.02	-0.02	1.03e-03	-5.95e-04	-1.62e-05
163	4	0.14	0.05	-0.02	1.05e-03	-5.21e-04	4.84e-04
163	5	-0.12	-0.02	-0.01	1.01e-03	-6.69e-04	-5.17e-04
163	6	0.13	-0.03	-0.02	1.05e-03	-5.23e-04	-5.62e-04
163	7	-0.11	0.06	-0.01	1.01e-03	-6.68e-04	5.30e-04
163	8	-0.07	0.13	-0.02	9.33e-04	-5.90e-04	5.45e-04
163	9	0.09	-0.10	-7.53e-03	1.13e-03	-6.01e-04	-5.78e-04
163	10	0.07	0.14	-0.02	9.29e-04	-6.00e-04	-5.14e-04
163	11	-0.05	-0.10	-7.37e-03	1.13e-03	-5.90e-04	4.81e-04
163	12	0.07	0.03	-0.02	1.04e-03	-5.59e-04	2.19e-04
163	13	-0.05	-1.88e-03	-0.01	1.02e-03	-6.31e-04	-2.51e-04
163	14	0.07	-5.78e-03	-0.02	1.04e-03	-5.60e-04	-2.72e-04
163	15	-0.05	0.04	-0.01	1.02e-03	-6.30e-04	2.40e-04
163	16	-0.03	0.07	-0.02	9.83e-04	-5.92e-04	2.48e-04
163	17	0.05	-0.04	-0.01	1.08e-03	-5.98e-04	-2.80e-04
163	18	0.04	0.07	-0.02	9.81e-04	-5.97e-04	-2.49e-04
163	19	-0.02	-0.04	-0.01	1.08e-03	-5.93e-04	2.16e-04
163	20	9.85e-03	0.02	-0.02	1.03e-03	-5.95e-04	-1.62e-05
163	21	9.85e-03	0.02	-0.02	1.03e-03	-5.95e-04	-1.62e-05
163	22	9.85e-03	0.02	-0.02	1.03e-03	-5.95e-04	-1.62e-05
164	1	0.01	0.02	-0.01	-1.56e-03	8.91e-04	4.64e-06
164	2	-1.76e-04	-6.73e-05	-7.33e-03	-2.81e-05	9.17e-06	5.23e-06
164	3	9.35e-03	0.01	-9.69e-03	-1.05e-03	5.95e-04	3.79e-06
164	4	0.17	0.05	-0.02	-1.03e-03	6.65e-04	5.03e-04
164	5	-0.15	-0.02	-4.34e-03	-1.06e-03	5.26e-04	-4.95e-04
164	6	0.16	-0.03	-0.01	-1.03e-03	6.63e-04	-5.43e-04
164	7	-0.14	0.06	-4.40e-03	-1.07e-03	5.28e-04	5.51e-04
164	8	-0.07	0.15	-0.02	-1.16e-03	6.09e-04	5.63e-04
164	9	0.09	-0.12	-7.14e-04	-9.32e-04	5.82e-04	-5.55e-04
164	10	0.07	0.16	-0.02	-1.17e-03	6.11e-04	-4.95e-04

164	11	-0.05	-0.13	-4.67e-04	-9.25e-04	5.80e-04	5.02e-04
164	12	0.09	0.03	-0.01	-1.04e-03	6.29e-04	2.38e-04
164	13	-0.07	-2.41e-03	-7.08e-03	-1.05e-03	5.62e-04	-2.30e-04
164	14	0.08	-6.80e-03	-0.01	-1.04e-03	6.29e-04	-2.53e-04
164	15	-0.06	0.04	-7.11e-03	-1.06e-03	5.62e-04	2.61e-04
164	16	-0.03	0.08	-0.01	-1.10e-03	6.02e-04	2.66e-04
164	17	0.05	-0.05	-5.33e-03	-9.91e-04	5.89e-04	-2.59e-04
164	18	0.04	0.09	-0.01	-1.11e-03	6.03e-04	-2.30e-04
164	19	-0.02	-0.06	-5.22e-03	-9.87e-04	5.88e-04	2.37e-04
164	20	9.35e-03	0.01	-9.69e-03	-1.05e-03	5.95e-04	3.79e-06
164	21	9.35e-03	0.01	-9.69e-03	-1.05e-03	5.95e-04	3.79e-06
164	22	9.35e-03	0.01	-9.69e-03	-1.05e-03	5.95e-04	3.79e-06
165	1	1.05e-03	1.00e-03	0.04	-1.52e-03	8.78e-04	-6.81e-06
165	2	-8.33e-05	-2.77e-05	-7.72e-03	9.11e-06	-5.42e-06	0.0
165	3	6.90e-04	6.66e-04	0.02	-1.01e-03	5.84e-04	-4.57e-06
165	4	0.14	-8.15e-03	0.02	-1.02e-03	6.56e-04	4.89e-04
165	5	-0.14	9.48e-03	0.02	-1.00e-03	5.13e-04	-4.98e-04
165	6	0.14	-7.46e-03	0.02	-1.02e-03	6.53e-04	-5.47e-04
165	7	-0.14	8.79e-03	0.02	-1.01e-03	5.16e-04	5.38e-04
165	8	-8.88e-03	0.14	0.02	-1.07e-03	5.74e-04	5.49e-04
165	9	0.01	-0.14	0.02	-9.57e-04	5.95e-04	-5.58e-04
165	10	9.20e-03	0.15	0.02	-1.07e-03	5.73e-04	-5.00e-04
165	11	-7.82e-03	-0.14	0.02	-9.56e-04	5.96e-04	4.91e-04
165	12	0.07	-3.56e-03	0.02	-1.02e-03	6.19e-04	2.27e-04
165	13	-0.07	4.89e-03	0.02	-1.01e-03	5.50e-04	-2.36e-04
165	14	0.07	-3.14e-03	0.02	-1.02e-03	6.18e-04	-2.59e-04
165	15	-0.07	4.47e-03	0.02	-1.01e-03	5.51e-04	2.50e-04
165	16	-3.80e-03	0.07	0.02	-1.04e-03	5.79e-04	2.55e-04
165	17	5.18e-03	-0.07	0.02	-9.86e-04	5.89e-04	-2.64e-04
165	18	4.75e-03	0.07	0.02	-1.04e-03	5.79e-04	-2.37e-04
165	19	-3.37e-03	-0.07	0.02	-9.85e-04	5.90e-04	2.28e-04
165	20	6.90e-04	6.66e-04	0.02	-1.01e-03	5.84e-04	-4.57e-06
165	21	6.90e-04	6.66e-04	0.02	-1.01e-03	5.84e-04	-4.57e-06
165	22	6.90e-04	6.66e-04	0.02	-1.01e-03	5.84e-04	-4.57e-06
166	1	3.64e-05	-5.91e-04	0.04	1.52e-03	-8.79e-04	-3.31e-06
166	2	-6.80e-05	-2.44e-05	-7.72e-03	-8.77e-06	5.01e-06	0.0
166	3	1.52e-05	-3.97e-04	0.02	1.01e-03	-5.85e-04	-2.12e-06
166	4	0.14	-0.01	0.02	1.02e-03	-5.20e-04	4.92e-04
166	5	-0.14	9.22e-03	0.02	1.01e-03	-6.51e-04	-4.96e-04
166	6	0.14	-3.20e-03	0.02	1.01e-03	-5.21e-04	-5.43e-04
166	7	-0.14	2.41e-03	0.02	1.01e-03	-6.50e-04	5.39e-04
166	8	1.55e-04	0.14	0.02	9.45e-04	-5.82e-04	5.51e-04
166	9	-1.24e-04	-0.14	0.02	1.08e-03	-5.89e-04	-5.55e-04
166	10	-0.01	0.14	0.02	9.43e-04	-5.82e-04	-4.96e-04
166	11	0.01	-0.14	0.02	1.08e-03	-5.89e-04	4.92e-04
166	12	0.07	-5.04e-03	0.02	1.02e-03	-5.53e-04	2.30e-04
166	13	-0.07	4.24e-03	0.02	1.01e-03	-6.17e-04	-2.34e-04
166	14	0.07	-1.71e-03	0.02	1.01e-03	-5.54e-04	-2.56e-04
166	15	-0.07	9.16e-04	0.02	1.01e-03	-6.16e-04	2.52e-04
166	16	7.95e-05	0.07	0.02	9.80e-04	-5.84e-04	2.57e-04
166	17	-4.91e-05	-0.07	0.02	1.05e-03	-5.87e-04	-2.62e-04
166	18	-4.84e-03	0.07	0.02	9.79e-04	-5.84e-04	-2.34e-04
166	19	4.87e-03	-0.07	0.02	1.05e-03	-5.87e-04	2.29e-04
166	20	1.52e-05	-3.97e-04	0.02	1.01e-03	-5.85e-04	-2.12e-06
166	21	1.52e-05	-3.97e-04	0.02	1.01e-03	-5.85e-04	-2.12e-06
166	22	1.52e-05	-3.97e-04	0.02	1.01e-03	-5.85e-04	-2.12e-06
167	1	-2.44e-03	-6.05e-03	-0.03	3.59e-04	-2.10e-04	-3.06e-06
167	2	-9.60e-05	8.26e-05	-7.24e-03	3.80e-06	-3.55e-06	0.0
167	3	-1.64e-03	-4.02e-03	-0.02	2.40e-04	-1.41e-04	-1.95e-06
167	4	0.16	0.03	-0.02	2.27e-04	-7.00e-05	4.98e-04
167	5	-0.16	-0.04	-0.01	2.52e-04	-2.11e-04	-5.02e-04
167	6	0.14	-0.05	-0.02	2.28e-04	-7.24e-05	-5.51e-04
167	7	-0.15	0.04	-0.01	2.51e-04	-2.09e-04	5.47e-04
167	8	-0.07	0.14	-0.03	2.00e-04	-1.55e-04	5.58e-04
167	9	0.07	-0.14	-0.01	2.79e-04	-1.26e-04	-5.62e-04
167	10	0.05	0.14	-0.03	2.01e-04	-1.57e-04	-5.03e-04
167	11	-0.06	-0.15	-0.01	2.78e-04	-1.25e-04	4.99e-04
167	12	0.08	0.01	-0.02	2.33e-04	-1.06e-04	2.33e-04
167	13	-0.08	-0.02	-0.02	2.46e-04	-1.75e-04	-2.37e-04
167	14	0.07	-0.02	-0.02	2.34e-04	-1.08e-04	-2.60e-04
167	15	-0.07	0.02	-0.02	2.45e-04	-1.74e-04	2.56e-04
167	16	-0.03	0.06	-0.02	2.20e-04	-1.48e-04	2.61e-04
167	17	0.03	-0.07	-0.02	2.59e-04	-1.34e-04	-2.65e-04
167	18	0.02	0.07	-0.02	2.21e-04	-1.48e-04	-2.37e-04
167	19	-0.03	-0.08	-0.02	2.58e-04	-1.33e-04	2.33e-04
167	20	-1.64e-03	-4.02e-03	-0.02	2.40e-04	-1.41e-04	-1.95e-06
167	21	-1.64e-03	-4.02e-03	-0.02	2.40e-04	-1.41e-04	-1.95e-06

167	22	-1.64e-03	-4.02e-03	-0.02	2.40e-04	-1.41e-04	-1.95e-06
168	1	2.69e-03	3.27e-03	2.65e-03	-1.11e-04	6.23e-05	-5.06e-06
168	2	-1.25e-04	-1.93e-05	-7.51e-03	0.0	-1.01e-06	0.0
168	3	1.78e-03	2.18e-03	7.67e-04	-7.41e-05	4.14e-05	-3.33e-06
168	4	0.15	0.02	-2.05e-03	-6.51e-05	1.12e-04	4.94e-04
168	5	-0.15	-0.02	3.58e-03	-8.31e-05	-2.94e-05	-5.01e-04
168	6	0.14	-0.03	-2.03e-03	-6.39e-05	1.11e-04	-5.49e-04
168	7	-0.14	0.03	3.57e-03	-8.43e-05	-2.84e-05	5.42e-04
168	8	-0.04	0.14	-4.12e-03	-1.63e-04	5.70e-05	5.54e-04
168	9	0.05	-0.14	5.65e-03	1.49e-05	2.58e-05	-5.61e-04
168	10	0.04	0.15	-4.26e-03	-1.67e-04	5.78e-05	-5.01e-04
168	11	-0.03	-0.14	5.79e-03	1.87e-05	2.50e-05	4.94e-04
168	12	0.08	0.01	-6.03e-04	-6.98e-05	7.58e-05	2.30e-04
168	13	-0.07	-7.36e-03	2.14e-03	-7.84e-05	7.09e-06	-2.37e-04
168	14	0.07	-0.01	-5.97e-04	-6.94e-05	7.54e-05	-2.59e-04
168	15	-0.07	0.01	2.13e-03	-7.88e-05	7.44e-06	2.53e-04
168	16	-0.02	0.07	-1.60e-03	-1.17e-04	4.90e-05	2.59e-04
168	17	0.02	-0.06	3.14e-03	-3.12e-05	3.39e-05	-2.65e-04
168	18	0.02	0.07	-1.67e-03	-1.19e-04	4.95e-05	-2.36e-04
168	19	-0.01	-0.07	3.20e-03	-2.91e-05	3.34e-05	2.30e-04
168	20	1.78e-03	2.18e-03	7.67e-04	-7.41e-05	4.14e-05	-3.33e-06
168	21	1.78e-03	2.18e-03	7.67e-04	-7.41e-05	4.14e-05	-3.33e-06
168	22	1.78e-03	2.18e-03	7.67e-04	-7.41e-05	4.14e-05	-3.33e-06
169	1	0.03	0.05	-0.02	-3.06e-05	0.0	2.79e-05
169	2	-2.98e-04	-8.41e-04	-7.10e-03	-2.83e-05	7.36e-06	1.93e-05
169	3	0.02	0.03	-0.01	-2.42e-05	1.24e-06	2.11e-05
169	4	0.16	0.07	-0.02	-4.15e-05	7.28e-05	5.14e-04
169	5	-0.13	-7.00e-03	-7.57e-03	-6.88e-06	-7.03e-05	-4.72e-04
169	6	0.15	-0.02	-0.02	-4.00e-05	7.08e-05	-5.23e-04
169	7	-0.12	0.08	-7.61e-03	-8.36e-06	-6.84e-05	5.65e-04
169	8	-0.06	0.15	-0.02	-5.66e-05	-9.79e-06	5.74e-04
169	9	0.10	-0.09	-4.05e-03	8.22e-06	1.23e-05	-5.32e-04
169	10	0.08	0.16	-0.02	-5.45e-05	-1.14e-05	-4.75e-04
169	11	-0.05	-0.10	-3.84e-03	6.11e-06	1.39e-05	5.17e-04
169	12	0.09	0.05	-0.02	-3.26e-05	3.60e-05	2.52e-04
169	13	-0.05	0.01	-0.01	-1.57e-05	-3.35e-05	-2.10e-04
169	14	0.08	8.63e-03	-0.02	-3.15e-05	3.50e-05	-2.34e-04
169	15	-0.04	0.05	-0.01	-1.69e-05	-3.25e-05	2.77e-04
169	16	-0.02	0.09	-0.02	-4.01e-05	-4.00e-06	2.80e-04
169	17	0.05	-0.03	-8.59e-03	-8.24e-06	6.48e-06	-2.38e-04
169	18	0.05	0.09	-0.02	-3.85e-05	-4.83e-06	-2.12e-04
169	19	-0.01	-0.03	-8.50e-03	-9.88e-06	7.30e-06	2.54e-04
169	20	0.02	0.03	-0.01	-2.42e-05	1.24e-06	2.11e-05
169	21	0.02	0.03	-0.01	-2.42e-05	1.24e-06	2.11e-05
169	22	0.02	0.03	-0.01	-2.42e-05	1.24e-06	2.11e-05
170	1	3.62e-03	6.62e-03	-7.95e-03	3.56e-04	-1.97e-04	-5.78e-06
170	2	4.04e-05	9.54e-05	-6.71e-03	-1.28e-06	4.04e-06	-3.19e-06
170	3	2.42e-03	4.42e-03	-6.20e-03	2.37e-04	-1.31e-04	-4.28e-06
170	4	0.12	-0.03	-2.12e-03	1.91e-04	-9.40e-05	5.00e-04
170	5	-0.11	0.04	-0.01	2.83e-04	-1.68e-04	-5.09e-04
170	6	0.13	0.04	-2.17e-03	1.90e-04	-9.63e-05	-5.66e-04
170	7	-0.12	-0.03	-0.01	2.85e-04	-1.66e-04	5.57e-04
170	8	0.06	0.12	1.47e-03	1.68e-04	-1.17e-04	5.63e-04
170	9	-0.06	-0.11	-0.01	3.07e-04	-1.45e-04	-5.72e-04
170	10	-0.06	0.11	1.67e-03	1.65e-04	-1.19e-04	-5.12e-04
170	11	0.06	-0.10	-0.01	3.10e-04	-1.43e-04	5.03e-04
170	12	0.06	-0.01	-4.21e-03	2.15e-04	-1.13e-04	2.31e-04
170	13	-0.05	0.02	-8.19e-03	2.60e-04	-1.49e-04	-2.40e-04
170	14	0.06	0.02	-4.24e-03	2.14e-04	-1.14e-04	-2.69e-04
170	15	-0.06	-0.01	-8.16e-03	2.61e-04	-1.48e-04	2.61e-04
170	16	0.03	0.06	-2.47e-03	2.04e-04	-1.24e-04	2.62e-04
170	17	-0.03	-0.05	-9.92e-03	2.71e-04	-1.38e-04	-2.71e-04
170	18	-0.02	0.06	-2.39e-03	2.02e-04	-1.26e-04	-2.42e-04
170	19	0.03	-0.05	-0.01	2.73e-04	-1.37e-04	2.33e-04
170	20	2.42e-03	4.42e-03	-6.20e-03	2.37e-04	-1.31e-04	-4.28e-06
170	21	2.42e-03	4.42e-03	-6.20e-03	2.37e-04	-1.31e-04	-4.28e-06
170	22	2.42e-03	4.42e-03	-6.20e-03	2.37e-04	-1.31e-04	-4.28e-06
171	1	-0.01	-0.02	-0.02	-1.52e-03	8.79e-04	0.0
171	2	-1.20e-04	-3.71e-04	-6.98e-03	1.02e-05	-5.05e-06	6.40e-06
171	3	-8.77e-03	-0.02	-0.02	-1.01e-03	5.86e-04	1.30e-06
171	4	0.11	-0.05	-0.01	-1.02e-03	6.69e-04	4.98e-04
171	5	-0.13	0.02	-0.02	-1.00e-03	5.03e-04	-4.96e-04
171	6	0.12	0.02	-0.01	-1.02e-03	6.67e-04	-5.42e-04
171	7	-0.14	-0.05	-0.02	-1.01e-03	5.04e-04	5.45e-04
171	8	0.06	0.10	-7.31e-03	-1.09e-03	5.83e-04	5.57e-04
171	9	-0.08	-0.13	-0.03	-9.36e-04	5.88e-04	-5.55e-04
171	10	-0.07	0.10	-7.07e-03	-1.09e-03	5.78e-04	-4.95e-04

171	11	0.06	-0.13	-0.03	-9.33e-04	5.93e-04	4.98e-04
171	12	0.05	-0.03	-0.01	-1.02e-03	6.26e-04	2.35e-04
171	13	-0.06	3.22e-03	-0.02	-1.01e-03	5.45e-04	-2.32e-04
171	14	0.06	2.18e-03	-0.01	-1.01e-03	6.25e-04	-2.54e-04
171	15	-0.07	-0.03	-0.02	-1.01e-03	5.46e-04	2.56e-04
171	16	0.02	0.04	-0.01	-1.05e-03	5.84e-04	2.62e-04
171	17	-0.04	-0.07	-0.02	-9.75e-04	5.87e-04	-2.60e-04
171	18	-0.04	0.04	-0.01	-1.05e-03	5.82e-04	-2.32e-04
171	19	0.02	-0.07	-0.02	-9.74e-04	5.89e-04	2.34e-04
171	20	-8.77e-03	-0.02	-0.02	-1.01e-03	5.86e-04	1.30e-06
171	21	-8.77e-03	-0.02	-0.02	-1.01e-03	5.86e-04	1.30e-06
171	22	-8.77e-03	-0.02	-0.02	-1.01e-03	5.86e-04	1.30e-06
172	1	-2.83e-03	-6.71e-03	-6.74e-03	-3.38e-04	2.05e-04	-2.12e-05
172	2	-6.26e-04	-6.90e-04	-5.54e-03	-1.21e-05	-6.28e-06	-3.32e-06
172	3	-1.97e-03	-4.57e-03	-5.23e-03	-2.27e-04	1.36e-04	-1.46e-05
172	4	0.12	0.03	-9.61e-03	-2.56e-04	2.21e-04	5.01e-04
172	5	-0.13	-0.04	-8.51e-04	-1.98e-04	5.01e-05	-5.31e-04
172	6	0.11	-0.04	-9.52e-03	-2.54e-04	2.27e-04	-5.84e-04
172	7	-0.12	0.04	-9.44e-04	-2.01e-04	4.42e-05	5.55e-04
172	8	-0.07	0.10	-0.01	-3.46e-04	3.06e-04	5.66e-04
172	9	0.06	-0.11	1.99e-04	-1.08e-04	-3.45e-05	-5.95e-04
172	10	0.05	0.11	-0.01	-3.48e-04	3.13e-04	-5.50e-04
172	11	-0.06	-0.12	2.64e-04	-1.06e-04	-4.18e-05	5.21e-04
172	12	0.06	0.01	-7.37e-03	-2.41e-04	1.77e-04	2.28e-04
172	13	-0.06	-0.02	-3.09e-03	-2.13e-04	9.44e-05	-2.57e-04
172	14	0.05	-0.02	-7.31e-03	-2.40e-04	1.80e-04	-2.82e-04
172	15	-0.06	0.01	-3.15e-03	-2.14e-04	9.07e-05	2.52e-04
172	16	-0.03	0.05	-7.87e-03	-2.85e-04	2.17e-04	2.56e-04
172	17	0.03	-0.06	-2.59e-03	-1.69e-04	5.36e-05	-2.85e-04
172	18	0.02	0.05	-7.89e-03	-2.86e-04	2.22e-04	-2.68e-04
172	19	-0.03	-0.06	-2.57e-03	-1.69e-04	4.92e-05	2.39e-04
172	20	-1.97e-03	-4.57e-03	-5.23e-03	-2.27e-04	1.36e-04	-1.46e-05
172	21	-1.97e-03	-4.57e-03	-5.23e-03	-2.27e-04	1.36e-04	-1.46e-05
172	22	-1.97e-03	-4.57e-03	-5.23e-03	-2.27e-04	1.36e-04	-1.46e-05
173	1	2.85e-03	3.35e-03	-0.04	8.51e-05	-6.21e-05	2.92e-06
173	2	-4.19e-05	2.92e-05	-7.65e-03	-1.65e-05	1.59e-06	-7.71e-06
173	3	1.89e-03	2.23e-03	-0.03	5.45e-05	-4.12e-05	0.0
173	4	0.11	0.02	-0.03	1.02e-04	1.38e-05	4.80e-04
173	5	-0.11	-0.02	-0.02	7.34e-06	-9.62e-05	-4.78e-04
173	6	0.11	-0.02	-0.03	1.05e-04	1.06e-05	-5.30e-04
173	7	-0.10	0.03	-0.02	3.61e-06	-9.30e-05	5.32e-04
173	8	-0.04	0.10	-0.03	2.09e-04	-1.37e-04	5.39e-04
173	9	0.04	-0.10	-0.02	-9.96e-05	5.50e-05	-5.37e-04
173	10	0.04	0.11	-0.03	2.14e-04	-1.42e-04	-4.82e-04
173	11	-0.03	-0.11	-0.02	-1.05e-04	5.97e-05	4.84e-04
173	12	0.06	0.01	-0.03	7.73e-05	-1.45e-05	2.25e-04
173	13	-0.05	-7.22e-03	-0.03	3.17e-05	-6.79e-05	-2.23e-04
173	14	0.05	-9.95e-03	-0.03	7.95e-05	-1.63e-05	-2.49e-04
173	15	-0.05	0.01	-0.03	2.95e-05	-6.61e-05	2.51e-04
173	16	-0.02	0.05	-0.03	1.29e-04	-8.76e-05	2.53e-04
173	17	0.02	-0.05	-0.02	-2.00e-05	5.20e-06	-2.51e-04
173	18	0.02	0.06	-0.03	1.32e-04	-9.01e-05	-2.26e-04
173	19	-0.01	-0.05	-0.02	-2.31e-05	7.70e-06	2.27e-04
173	20	1.89e-03	2.23e-03	-0.03	5.45e-05	-4.12e-05	0.0
173	21	1.89e-03	2.23e-03	-0.03	5.45e-05	-4.12e-05	0.0
173	22	1.89e-03	2.23e-03	-0.03	5.45e-05	-4.12e-05	0.0
174	1	4.33e-03	8.84e-04	-0.04	3.35e-05	-1.25e-04	-4.07e-06
174	2	-4.17e-05	3.13e-05	-7.24e-03	0.0	2.03e-06	0.0
174	3	2.88e-03	5.93e-04	-0.03	2.23e-05	-8.31e-05	-2.63e-06
174	4	0.11	0.04	-0.03	3.14e-05	-3.14e-05	5.03e-04
174	5	-0.10	-0.04	-0.02	1.32e-05	-1.35e-04	-5.08e-04
174	6	0.10	-0.05	-0.03	2.93e-05	-3.27e-05	-5.57e-04
174	7	-0.10	0.05	-0.02	1.52e-05	-1.34e-04	5.52e-04
174	8	-0.01	0.11	-0.03	-5.40e-05	-9.01e-05	5.63e-04
174	9	0.02	-0.11	-0.03	9.85e-05	-7.61e-05	-5.68e-04
174	10	0.01	0.12	-0.03	-5.65e-05	-9.14e-05	-5.11e-04
174	11	-8.10e-03	-0.11	-0.03	1.01e-04	-7.48e-05	5.05e-04
174	12	0.05	0.02	-0.03	2.66e-05	-5.80e-05	2.35e-04
174	13	-0.05	-0.02	-0.02	1.79e-05	-1.08e-04	-2.40e-04
174	14	0.05	-0.02	-0.03	2.56e-05	-5.86e-05	-2.63e-04
174	15	-0.05	0.02	-0.02	1.89e-05	-1.08e-04	2.58e-04
174	16	-4.22e-03	0.05	-0.03	-1.47e-05	-8.65e-05	2.62e-04
174	17	9.99e-03	-0.05	-0.03	5.92e-05	-7.97e-05	-2.67e-04
174	18	8.02e-03	0.06	-0.03	-1.59e-05	-8.71e-05	-2.41e-04
174	19	-2.26e-03	-0.06	-0.03	6.04e-05	-7.91e-05	2.36e-04
174	20	2.88e-03	5.93e-04	-0.03	2.23e-05	-8.31e-05	-2.63e-06
174	21	2.88e-03	5.93e-04	-0.03	2.23e-05	-8.31e-05	-2.63e-06

174	22	2.88e-03	5.93e-04	-0.03	2.23e-05	-8.31e-05	-2.63e-06
175	1	-3.15e-03	-4.45e-04	2.65e-03	3.15e-05	-1.17e-04	-4.07e-06
175	2	-4.60e-05	-6.63e-05	-7.51e-03	0.0	2.24e-06	0.0
175	3	-2.10e-03	-3.05e-04	7.66e-04	2.09e-05	-7.80e-05	-2.64e-06
175	4	0.14	-0.04	6.22e-03	2.85e-05	-3.25e-05	4.98e-04
175	5	-0.14	0.04	-4.69e-03	1.33e-05	-1.24e-04	-5.03e-04
175	6	0.14	0.04	6.11e-03	2.70e-05	-3.42e-05	-5.51e-04
175	7	-0.14	-0.04	-4.58e-03	1.48e-05	-1.22e-04	5.46e-04
175	8	4.76e-03	0.15	2.26e-03	-4.43e-05	-8.37e-05	5.58e-04
175	9	-8.97e-03	-0.15	-7.28e-04	8.61e-05	-7.23e-05	-5.63e-04
175	10	-0.02	0.14	2.25e-03	-4.65e-05	-8.19e-05	-5.03e-04
175	11	0.01	-0.15	-7.21e-04	8.83e-05	-7.41e-05	4.98e-04
175	12	0.07	-0.02	3.41e-03	2.45e-05	-5.59e-05	2.32e-04
175	13	-0.07	0.02	-1.88e-03	1.73e-05	-1.00e-04	-2.37e-04
175	14	0.07	0.02	3.36e-03	2.38e-05	-5.69e-05	-2.60e-04
175	15	-0.07	-0.02	-1.83e-03	1.80e-05	-9.92e-05	2.55e-04
175	16	1.12e-03	0.07	1.49e-03	-1.07e-05	-8.07e-05	2.60e-04
175	17	-5.32e-03	-0.07	3.76e-05	5.25e-05	-7.53e-05	-2.66e-04
175	18	-9.01e-03	0.07	1.49e-03	-1.17e-05	-7.99e-05	-2.37e-04
175	19	4.80e-03	-0.07	4.05e-05	5.36e-05	-7.62e-05	2.32e-04
175	20	-2.10e-03	-3.05e-04	7.66e-04	2.09e-05	-7.80e-05	-2.64e-06
175	21	-2.10e-03	-3.05e-04	7.66e-04	2.09e-05	-7.80e-05	-2.64e-06
175	22	-2.10e-03	-3.05e-04	7.66e-04	2.09e-05	-7.80e-05	-2.64e-06
176	1	-0.01	-0.02	-0.01	1.53e-03	-8.91e-04	-7.35e-06
176	2	-4.77e-05	-2.02e-04	-7.18e-03	0.0	-4.61e-06	-1.65e-06
176	3	-8.72e-03	-0.01	-9.51e-03	1.02e-03	-5.94e-04	-5.12e-06
176	4	0.14	-0.05	-4.20e-03	1.02e-03	-5.08e-04	4.94e-04
176	5	-0.15	0.02	-0.01	1.03e-03	-6.81e-04	-5.04e-04
176	6	0.15	0.02	-4.21e-03	1.02e-03	-5.08e-04	-5.52e-04
176	7	-0.17	-0.05	-0.01	1.02e-03	-6.81e-04	5.42e-04
176	8	0.06	0.13	-6.63e-04	9.53e-04	-6.01e-04	5.53e-04
176	9	-0.08	-0.16	-0.02	1.09e-03	-5.87e-04	-5.64e-04
176	10	-0.08	0.13	-4.62e-04	9.52e-04	-6.05e-04	-5.04e-04
176	11	0.06	-0.16	-0.02	1.09e-03	-5.83e-04	4.94e-04
176	12	0.06	-0.03	-6.92e-03	1.02e-03	-5.53e-04	2.29e-04
176	13	-0.08	3.90e-03	-0.01	1.02e-03	-6.36e-04	-2.39e-04
176	14	0.07	2.00e-03	-6.93e-03	1.02e-03	-5.52e-04	-2.62e-04
176	15	-0.09	-0.03	-0.01	1.02e-03	-6.37e-04	2.51e-04
176	16	0.02	0.06	-5.22e-03	9.88e-04	-5.98e-04	2.57e-04
176	17	-0.04	-0.09	-0.01	1.05e-03	-5.91e-04	-2.67e-04
176	18	-0.04	0.05	-5.13e-03	9.88e-04	-6.00e-04	-2.39e-04
176	19	0.02	-0.08	-0.01	1.05e-03	-5.89e-04	2.29e-04
176	20	-8.72e-03	-0.01	-9.51e-03	1.02e-03	-5.94e-04	-5.12e-06
176	21	-8.72e-03	-0.01	-9.51e-03	1.02e-03	-5.94e-04	-5.12e-06
176	22	-8.72e-03	-0.01	-9.51e-03	1.02e-03	-5.94e-04	-5.12e-06
177	1	-1.60e-03	-2.94e-03	-0.04	-1.13e-04	6.08e-05	-6.02e-06
177	2	-3.88e-05	-1.19e-04	-7.31e-03	0.0	-8.20e-06	2.99e-06
177	3	-1.07e-03	-1.98e-03	-0.03	-7.56e-05	3.95e-05	-3.62e-06
177	4	0.10	-0.02	-0.02	-1.35e-05	1.05e-04	4.89e-04
177	5	-0.11	0.02	-0.03	-1.38e-04	-2.58e-05	-4.96e-04
177	6	0.11	0.02	-0.02	-1.47e-05	1.03e-04	-5.38e-04
177	7	-0.11	-0.02	-0.03	-1.36e-04	-2.40e-05	5.31e-04
177	8	0.03	0.10	-0.02	-1.34e-04	3.18e-05	5.44e-04
177	9	-0.04	-0.11	-0.03	-1.74e-05	4.71e-05	-5.51e-04
177	10	-0.04	0.10	-0.02	-1.35e-04	3.03e-05	-4.93e-04
177	11	0.03	-0.11	-0.03	-1.57e-05	4.86e-05	4.86e-04
177	12	0.05	-0.01	-0.03	-4.57e-05	7.11e-05	2.28e-04
177	13	-0.05	8.24e-03	-0.03	-1.05e-04	7.82e-06	-2.35e-04
177	14	0.05	6.32e-03	-0.03	-4.59e-05	7.03e-05	-2.54e-04
177	15	-0.06	-0.01	-0.03	-1.05e-04	8.64e-06	2.47e-04
177	16	0.02	0.05	-0.02	-1.04e-04	3.58e-05	2.53e-04
177	17	-0.02	-0.05	-0.03	-4.73e-05	4.31e-05	-2.60e-04
177	18	-0.02	0.05	-0.02	-1.04e-04	3.51e-05	-2.33e-04
177	19	0.02	-0.05	-0.03	-4.68e-05	4.38e-05	2.26e-04
177	20	-1.07e-03	-1.98e-03	-0.03	-7.56e-05	3.95e-05	-3.62e-06
177	21	-1.07e-03	-1.98e-03	-0.03	-7.56e-05	3.95e-05	-3.62e-06
177	22	-1.07e-03	-1.98e-03	-0.03	-7.56e-05	3.95e-05	-3.62e-06
178	1	3.53e-03	6.43e-03	-0.03	-3.55e-04	2.03e-04	-4.34e-06
178	2	-5.25e-05	-1.48e-04	-7.22e-03	-2.01e-06	0.0	0.0
178	3	2.35e-03	4.27e-03	-0.02	-2.37e-04	1.35e-04	-2.82e-06
178	4	0.15	-0.03	-0.01	-2.31e-04	1.98e-04	4.99e-04
178	5	-0.14	0.04	-0.02	-2.43e-04	7.28e-05	-5.04e-04
178	6	0.16	0.03	-0.01	-2.33e-04	1.96e-04	-5.54e-04
178	7	-0.15	-0.03	-0.02	-2.40e-04	7.46e-05	5.48e-04
178	8	0.06	0.15	-0.01	-3.03e-04	1.41e-04	5.59e-04
178	9	-0.06	-0.14	-0.03	-1.71e-04	1.29e-04	-5.65e-04
178	10	-0.06	0.15	-0.01	-3.05e-04	1.39e-04	-5.05e-04

178	11	0.06	-0.14	-0.03	-1.68e-04	1.31e-04	4.99e-04
178	12	0.07	-0.01	-0.02	-2.34e-04	1.66e-04	2.32e-04
178	13	-0.07	0.02	-0.02	-2.40e-04	1.05e-04	-2.38e-04
178	14	0.08	0.02	-0.02	-2.35e-04	1.65e-04	-2.62e-04
178	15	-0.07	-0.01	-0.02	-2.38e-04	1.06e-04	2.56e-04
178	16	0.03	0.07	-0.02	-2.69e-04	1.38e-04	2.61e-04
178	17	-0.03	-0.07	-0.02	-2.05e-04	1.32e-04	-2.67e-04
178	18	-0.03	0.07	-0.02	-2.70e-04	1.37e-04	-2.38e-04
178	19	0.03	-0.06	-0.02	-2.04e-04	1.33e-04	2.33e-04
178	20	2.35e-03	4.27e-03	-0.02	-2.37e-04	1.35e-04	-2.82e-06
178	21	2.35e-03	4.27e-03	-0.02	-2.37e-04	1.35e-04	-2.82e-06
178	22	2.35e-03	4.27e-03	-0.02	-2.37e-04	1.35e-04	-2.82e-06
179	1	-1.60e-03	-2.86e-03	2.66e-03	1.13e-04	-6.59e-05	-3.84e-06
179	2	-2.65e-05	-3.44e-05	-7.50e-03	0.0	0.0	0.0
179	3	-1.07e-03	-1.91e-03	7.77e-04	7.53e-05	-4.39e-05	-2.48e-06
179	4	0.14	-0.03	3.66e-03	7.02e-05	3.22e-05	4.95e-04
179	5	-0.14	0.02	-2.11e-03	8.03e-05	-1.20e-04	-5.00e-04
179	6	0.15	0.01	3.65e-03	7.10e-05	3.09e-05	-5.47e-04
179	7	-0.15	-0.02	-2.10e-03	7.96e-05	-1.19e-04	5.42e-04
179	8	0.03	0.14	5.53e-03	7.22e-06	-4.44e-05	5.54e-04
179	9	-0.04	-0.14	-3.98e-03	1.43e-04	-4.35e-05	-5.59e-04
179	10	-0.04	0.14	5.64e-03	4.84e-06	-4.93e-05	-5.00e-04
179	11	0.04	-0.14	-4.09e-03	1.46e-04	-3.86e-05	4.95e-04
179	12	0.07	-0.01	2.18e-03	7.28e-05	-7.02e-06	2.31e-04
179	13	-0.07	9.07e-03	-6.28e-04	7.78e-05	-8.08e-05	-2.36e-04
179	14	0.07	5.90e-03	2.18e-03	7.32e-05	-7.51e-06	-2.58e-04
179	15	-0.07	-9.73e-03	-6.22e-04	7.74e-05	-8.03e-05	2.53e-04
179	16	0.01	0.07	3.08e-03	4.23e-05	-4.41e-05	2.59e-04
179	17	-0.02	-0.07	-1.53e-03	1.08e-04	-4.37e-05	-2.64e-04
179	18	-0.02	0.07	3.13e-03	4.12e-05	-4.65e-05	-2.36e-04
179	19	0.02	-0.07	-1.58e-03	1.09e-04	-4.14e-05	2.31e-04
179	20	-1.07e-03	-1.91e-03	7.77e-04	7.53e-05	-4.39e-05	-2.48e-06
179	21	-1.07e-03	-1.91e-03	7.77e-04	7.53e-05	-4.39e-05	-2.48e-06
179	22	-1.07e-03	-1.91e-03	7.77e-04	7.53e-05	-4.39e-05	-2.48e-06
180	1	-0.03	-0.05	-0.02	0.0	-3.60e-06	-2.64e-05
180	2	-2.31e-04	-1.05e-03	-7.09e-03	1.77e-06	-4.06e-06	-1.34e-05
180	3	-0.02	-0.03	-0.01	0.0	-2.94e-06	-1.94e-05
180	4	0.11	-0.07	-7.58e-03	5.39e-06	5.47e-05	4.82e-04
180	5	-0.15	7.33e-03	-0.02	-5.43e-06	-6.06e-05	-5.21e-04
180	6	0.13	4.41e-03	-7.62e-03	3.88e-06	5.24e-05	-5.70e-04
180	7	-0.16	-0.07	-0.02	-3.92e-06	-5.83e-05	5.31e-04
180	8	0.05	0.10	-3.97e-03	-6.69e-05	5.42e-06	5.42e-04
180	9	-0.09	-0.16	-0.02	6.69e-05	-1.13e-05	-5.81e-04
180	10	-0.08	0.09	-3.75e-03	-6.93e-05	2.88e-06	-5.23e-04
180	11	0.05	-0.16	-0.02	6.93e-05	-8.77e-06	4.84e-04
180	12	0.04	-0.05	-0.01	2.56e-06	2.51e-05	2.16e-04
180	13	-0.08	-0.01	-0.02	-2.60e-06	-3.10e-05	-2.55e-04
180	14	0.05	-0.01	-0.01	1.78e-06	2.38e-05	-2.78e-04
180	15	-0.09	-0.05	-0.02	-1.82e-06	-2.97e-05	2.39e-04
180	16	0.01	0.03	-8.54e-03	-3.24e-05	1.10e-06	2.44e-04
180	17	-0.05	-0.10	-0.02	3.24e-05	-6.99e-06	-2.83e-04
180	18	-0.05	0.03	-8.44e-03	-3.36e-05	0.0	-2.55e-04
180	19	0.01	-0.09	-0.02	3.35e-05	-5.65e-06	2.16e-04
180	20	-0.02	-0.03	-0.01	0.0	-2.94e-06	-1.94e-05
180	21	-0.02	-0.03	-0.01	0.0	-2.94e-06	-1.94e-05
180	22	-0.02	-0.03	-0.01	0.0	-2.94e-06	-1.94e-05
181	1	-1.40e-04	-4.42e-04	-0.07	-1.27e-03	1.26e-03	-5.57e-06
181	2	-7.79e-05	-4.00e-05	-7.33e-03	-9.88e-06	1.14e-05	8.82e-06
181	3	-1.04e-04	-3.00e-04	-0.05	-8.45e-04	8.44e-04	-2.53e-06
181	4	0.10	-7.97e-03	-0.05	-8.26e-04	1.09e-03	4.88e-04
181	5	-0.10	7.37e-03	-0.05	-8.64e-04	6.01e-04	-4.93e-04
181	6	0.10	-1.12e-03	-0.05	-8.28e-04	1.08e-03	-5.34e-04
181	7	-0.10	5.17e-04	-0.05	-8.62e-04	6.06e-04	5.29e-04
181	8	-4.79e-04	0.10	-0.05	-9.29e-04	8.42e-04	5.43e-04
181	9	2.71e-04	-0.10	-0.05	-7.61e-04	8.47e-04	-5.48e-04
181	10	-7.51e-03	0.10	-0.05	-9.32e-04	8.26e-04	-4.88e-04
181	11	7.31e-03	-0.10	-0.05	-7.57e-04	8.63e-04	4.83e-04
181	12	0.05	-3.99e-03	-0.05	-8.36e-04	9.62e-04	2.29e-04
181	13	-0.05	3.39e-03	-0.05	-8.54e-04	7.27e-04	-2.34e-04
181	14	0.05	-6.88e-04	-0.05	-8.37e-04	9.60e-04	-2.51e-04
181	15	-0.05	8.83e-05	-0.05	-8.53e-04	7.28e-04	2.46e-04
181	16	-2.83e-04	0.05	-0.05	-8.85e-04	8.43e-04	2.54e-04
181	17	7.59e-05	-0.05	-0.05	-8.04e-04	8.45e-04	-2.59e-04
181	18	-3.66e-03	0.05	-0.05	-8.87e-04	8.35e-04	-2.30e-04
181	19	3.46e-03	-0.05	-0.05	-8.02e-04	8.53e-04	2.25e-04
181	20	-1.04e-04	-3.00e-04	-0.05	-8.45e-04	8.44e-04	-2.53e-06
181	21	-1.04e-04	-3.00e-04	-0.05	-8.45e-04	8.44e-04	-2.53e-06

181	22	-1.04e-04	-3.00e-04	-0.05	-8.45e-04	8.44e-04	-2.53e-06
182	1	1.28e-03	8.60e-04	-0.07	1.26e-03	-1.27e-03	-2.31e-06
182	2	-7.42e-05	-1.98e-05	-7.33e-03	1.14e-05	-9.87e-06	-7.69e-06
182	3	8.42e-04	5.71e-04	-0.05	8.44e-04	-8.45e-04	-2.57e-06
182	4	0.10	-6.41e-03	-0.05	8.28e-04	-7.61e-04	4.88e-04
182	5	-0.10	7.55e-03	-0.05	8.60e-04	-9.29e-04	-4.93e-04
182	6	0.10	-7.48e-03	-0.05	8.30e-04	-7.61e-04	-5.37e-04
182	7	-0.10	8.62e-03	-0.05	8.58e-04	-9.28e-04	5.32e-04
182	8	-6.69e-03	0.10	-0.05	6.10e-04	-8.63e-04	5.48e-04
182	9	8.37e-03	-0.10	-0.05	1.08e-03	-8.26e-04	-5.54e-04
182	10	7.21e-03	0.11	-0.05	6.02e-04	-8.66e-04	-4.90e-04
182	11	-5.53e-03	-0.10	-0.05	1.09e-03	-8.24e-04	4.84e-04
182	12	0.05	-2.74e-03	-0.05	8.36e-04	-8.04e-04	2.28e-04
182	13	-0.05	3.88e-03	-0.05	8.52e-04	-8.85e-04	-2.33e-04
182	14	0.05	-3.19e-03	-0.05	8.37e-04	-8.04e-04	-2.53e-04
182	15	-0.05	4.34e-03	-0.05	8.51e-04	-8.86e-04	2.48e-04
182	16	-2.69e-03	0.05	-0.05	7.31e-04	-8.54e-04	2.57e-04
182	17	4.37e-03	-0.05	-0.05	9.58e-04	-8.36e-04	-2.62e-04
182	18	3.87e-03	0.05	-0.05	7.27e-04	-8.55e-04	-2.30e-04
182	19	-2.19e-03	-0.05	-0.05	9.61e-04	-8.35e-04	2.25e-04
182	20	8.42e-04	5.71e-04	-0.05	8.44e-04	-8.45e-04	-2.57e-06
182	21	8.42e-04	5.71e-04	-0.05	8.44e-04	-8.45e-04	-2.57e-06
182	22	8.42e-04	5.71e-04	-0.05	8.44e-04	-8.45e-04	-2.57e-06
183	1	0.02	0.02	-0.02	1.25e-03	-1.25e-03	-1.49e-05
183	2	2.46e-04	3.00e-04	-6.79e-03	-4.58e-06	5.44e-06	-1.42e-05
183	3	0.01	0.01	-0.02	8.31e-04	-8.30e-04	-1.18e-05
183	4	0.14	0.06	-0.02	8.24e-04	-7.61e-04	4.84e-04
183	5	-0.11	-0.04	-8.51e-03	8.38e-04	-8.99e-04	-5.07e-04
183	6	0.13	-0.05	-0.02	8.25e-04	-7.60e-04	-5.55e-04
183	7	-0.10	0.07	-8.60e-03	8.37e-04	-9.00e-04	5.31e-04
183	8	-0.05	0.13	-0.02	7.67e-04	-8.03e-04	5.44e-04
183	9	0.08	-0.11	-9.17e-03	8.95e-04	-8.57e-04	-5.68e-04
183	10	0.07	0.14	-0.02	7.67e-04	-8.02e-04	-5.07e-04
183	11	-0.04	-0.11	-9.08e-03	8.96e-04	-8.58e-04	4.83e-04
183	12	0.07	0.04	-0.02	8.27e-04	-7.96e-04	2.21e-04
183	13	-0.05	-0.01	-0.01	8.35e-04	-8.63e-04	-2.44e-04
183	14	0.07	-0.02	-0.02	8.28e-04	-7.96e-04	-2.67e-04
183	15	-0.04	0.04	-0.01	8.34e-04	-8.64e-04	2.43e-04
183	16	-0.02	0.07	-0.02	8.00e-04	-8.17e-04	2.49e-04
183	17	0.04	-0.04	-0.01	8.62e-04	-8.43e-04	-2.73e-04
183	18	0.04	0.07	-0.02	8.00e-04	-8.16e-04	-2.44e-04
183	19	-0.01	-0.05	-0.01	8.62e-04	-8.44e-04	2.20e-04
183	20	0.01	0.01	-0.02	8.31e-04	-8.30e-04	-1.18e-05
183	21	0.01	0.01	-0.02	8.31e-04	-8.30e-04	-1.18e-05
183	22	0.01	0.01	-0.02	8.31e-04	-8.30e-04	-1.18e-05
184	1	0.02	0.02	-0.01	-1.27e-03	1.26e-03	1.79e-06
184	2	-9.60e-05	2.91e-05	-7.26e-03	-1.48e-05	5.99e-06	4.59e-06
184	3	0.01	0.01	-9.60e-03	-8.48e-04	8.38e-04	1.81e-06
184	4	0.17	0.06	-0.02	-8.53e-04	9.01e-04	5.01e-04
184	5	-0.14	-0.04	-2.11e-03	-8.43e-04	7.75e-04	-4.97e-04
184	6	0.16	-0.05	-0.02	-8.44e-04	9.01e-04	-5.46e-04
184	7	-0.13	0.08	-2.23e-03	-8.52e-04	7.75e-04	5.50e-04
184	8	-0.05	0.16	-0.02	-9.22e-04	8.63e-04	5.61e-04
184	9	0.08	-0.13	-2.27e-03	-7.74e-04	8.13e-04	-5.57e-04
184	10	0.06	0.17	-0.02	-9.26e-04	8.67e-04	-4.98e-04
184	11	-0.04	-0.14	-2.09e-03	-7.70e-04	8.09e-04	5.02e-04
184	12	0.09	0.04	-0.01	-8.50e-04	8.68e-04	2.36e-04
184	13	-0.06	-0.01	-5.96e-03	-8.46e-04	8.08e-04	-2.32e-04
184	14	0.08	-0.02	-0.01	-8.46e-04	8.69e-04	-2.55e-04
184	15	-0.05	0.04	-6.01e-03	-8.50e-04	8.07e-04	2.59e-04
184	16	-0.02	0.08	-0.01	-8.84e-04	8.50e-04	2.64e-04
184	17	0.04	-0.06	-6.04e-03	-8.12e-04	8.26e-04	-2.60e-04
184	18	0.04	0.09	-0.01	-8.86e-04	8.52e-04	-2.33e-04
184	19	-0.01	-0.06	-5.96e-03	-8.10e-04	8.24e-04	2.36e-04
184	20	0.01	0.01	-9.60e-03	-8.48e-04	8.38e-04	1.81e-06
184	21	0.01	0.01	-9.60e-03	-8.48e-04	8.38e-04	1.81e-06
184	22	0.01	0.01	-9.60e-03	-8.48e-04	8.38e-04	1.81e-06
185	1	1.24e-03	8.46e-04	0.04	-1.24e-03	1.24e-03	-5.81e-06
185	2	-8.35e-05	-2.57e-05	-7.72e-03	6.95e-06	-7.11e-06	0.0
185	3	8.16e-04	5.60e-04	0.02	-8.28e-04	8.28e-04	-3.87e-06
185	4	0.14	9.55e-03	0.02	-8.33e-04	8.97e-04	4.90e-04
185	5	-0.14	-8.43e-03	0.02	-8.23e-04	7.58e-04	-4.98e-04
185	6	0.14	-8.69e-03	0.02	-8.30e-04	8.95e-04	-5.46e-04
185	7	-0.14	9.81e-03	0.02	-8.26e-04	7.60e-04	5.38e-04
185	8	-7.87e-03	0.14	0.02	-8.88e-04	8.23e-04	5.49e-04
185	9	9.50e-03	-0.14	0.02	-7.68e-04	8.32e-04	-5.57e-04
185	10	-7.49e-03	0.15	0.02	-8.90e-04	8.22e-04	-4.99e-04

185	11	9.12e-03	-0.14	0.02	-7.66e-04	8.34e-04	4.91e-04
185	12	0.07	4.85e-03	0.02	-8.30e-04	8.61e-04	2.28e-04
185	13	-0.07	-3.73e-03	0.02	-8.25e-04	7.94e-04	-2.35e-04
185	14	0.07	-3.78e-03	0.02	-8.29e-04	8.61e-04	-2.58e-04
185	15	-0.07	4.90e-03	0.02	-8.27e-04	7.95e-04	2.51e-04
185	16	-3.26e-03	0.07	0.02	-8.57e-04	8.25e-04	2.56e-04
185	17	4.89e-03	-0.07	0.02	-7.99e-04	8.30e-04	-2.63e-04
185	18	-3.15e-03	0.07	0.02	-8.58e-04	8.25e-04	-2.36e-04
185	19	4.79e-03	-0.07	0.02	-7.98e-04	8.30e-04	2.28e-04
185	20	8.16e-04	5.60e-04	0.02	-8.28e-04	8.28e-04	-3.87e-06
185	21	8.16e-04	5.60e-04	0.02	-8.28e-04	8.28e-04	-3.87e-06
185	22	8.16e-04	5.60e-04	0.02	-8.28e-04	8.28e-04	-3.87e-06
186	1	-1.53e-04	-4.32e-04	0.04	1.24e-03	-1.24e-03	-1.89e-06
186	2	-6.78e-05	-2.65e-05	-7.72e-03	-7.11e-06	6.96e-06	1.10e-06
186	3	-1.11e-04	-2.92e-04	0.02	8.28e-04	-8.28e-04	-1.12e-06
186	4	0.14	-0.01	0.02	8.34e-04	-7.66e-04	4.94e-04
186	5	-0.14	9.79e-03	0.02	8.21e-04	-8.90e-04	-4.96e-04
186	6	0.14	-2.11e-03	0.02	8.31e-04	-7.67e-04	-5.45e-04
186	7	-0.14	1.52e-03	0.02	8.24e-04	-8.89e-04	5.43e-04
186	8	-8.94e-04	0.14	0.02	7.57e-04	-8.24e-04	5.54e-04
186	9	6.72e-04	-0.14	0.02	8.98e-04	-8.32e-04	-5.56e-04
186	10	-9.75e-03	0.14	0.02	7.56e-04	-8.24e-04	-4.97e-04
186	11	9.53e-03	-0.14	0.02	8.99e-04	-8.31e-04	4.95e-04
186	12	0.07	-5.16e-03	0.02	8.31e-04	-7.98e-04	2.31e-04
186	13	-0.07	4.58e-03	0.02	8.24e-04	-8.58e-04	-2.33e-04
186	14	0.07	-1.14e-03	0.02	8.29e-04	-7.98e-04	-2.56e-04
186	15	-0.07	5.61e-04	0.02	8.26e-04	-8.57e-04	2.54e-04
186	16	-4.81e-04	0.07	0.02	7.93e-04	-8.26e-04	2.59e-04
186	17	2.59e-04	-0.07	0.02	8.62e-04	-8.30e-04	-2.62e-04
186	18	-4.75e-03	0.07	0.02	7.93e-04	-8.26e-04	-2.34e-04
186	19	4.53e-03	-0.07	0.02	8.62e-04	-8.30e-04	2.31e-04
186	20	-1.11e-04	-2.92e-04	0.02	8.28e-04	-8.28e-04	-1.12e-06
186	21	-1.11e-04	-2.92e-04	0.02	8.28e-04	-8.28e-04	-1.12e-06
186	22	-1.11e-04	-2.92e-04	0.02	8.28e-04	-8.28e-04	-1.12e-06
187	1	-3.95e-03	-5.06e-03	-0.03	2.86e-04	-2.90e-04	-3.10e-06
187	2	-6.54e-05	8.30e-05	-7.24e-03	0.0	-2.02e-06	0.0
187	3	-2.64e-03	-3.36e-03	-0.02	1.91e-04	-1.94e-04	-1.96e-06
187	4	0.15	0.04	-0.03	1.86e-04	-1.20e-04	4.94e-04
187	5	-0.16	-0.05	-0.01	1.95e-04	-2.68e-04	-4.98e-04
187	6	0.14	-0.06	-0.03	1.90e-04	-1.23e-04	-5.46e-04
187	7	-0.14	0.05	-0.01	1.92e-04	-2.65e-04	5.42e-04
187	8	-0.06	0.14	-0.03	1.30e-04	-2.10e-04	5.55e-04
187	9	0.05	-0.15	-0.01	2.52e-04	-1.78e-04	-5.59e-04
187	10	0.04	0.15	-0.03	1.28e-04	-2.11e-04	-4.98e-04
187	11	-0.05	-0.16	-0.01	2.54e-04	-1.76e-04	4.94e-04
187	12	0.07	0.02	-0.02	1.89e-04	-1.58e-04	2.31e-04
187	13	-0.08	-0.02	-0.02	1.93e-04	-2.30e-04	-2.35e-04
187	14	0.06	-0.03	-0.02	1.90e-04	-1.60e-04	-2.58e-04
187	15	-0.07	0.02	-0.02	1.91e-04	-2.28e-04	2.54e-04
187	16	-0.03	0.06	-0.02	1.61e-04	-2.01e-04	2.59e-04
187	17	0.02	-0.07	-0.02	2.20e-04	-1.86e-04	-2.63e-04
187	18	0.02	0.07	-0.02	1.60e-04	-2.02e-04	-2.34e-04
187	19	-0.02	-0.08	-0.02	2.21e-04	-1.85e-04	2.30e-04
187	20	-2.64e-03	-3.36e-03	-0.02	1.91e-04	-1.94e-04	-1.96e-06
187	21	-2.64e-03	-3.36e-03	-0.02	1.91e-04	-1.94e-04	-1.96e-06
187	22	-2.64e-03	-3.36e-03	-0.02	1.91e-04	-1.94e-04	-1.96e-06
188	1	3.41e-03	2.61e-03	2.66e-03	-9.35e-05	9.21e-05	-4.76e-06
188	2	-1.21e-04	-6.67e-06	-7.51e-03	0.0	0.0	0.0
188	3	2.26e-03	1.74e-03	7.72e-04	-6.24e-05	6.14e-05	-3.12e-06
188	4	0.15	0.03	-3.23e-03	-5.75e-05	1.30e-04	4.98e-04
188	5	-0.15	-0.03	4.78e-03	-6.73e-05	-7.63e-06	-5.04e-04
188	6	0.14	-0.03	-3.18e-03	-5.79e-05	1.29e-04	-5.52e-04
188	7	-0.14	0.04	4.72e-03	-6.70e-05	-6.67e-06	5.46e-04
188	8	-0.03	0.14	-3.24e-03	-1.40e-04	6.86e-05	5.58e-04
188	9	0.04	-0.14	4.79e-03	1.55e-05	5.41e-05	-5.64e-04
188	10	0.03	0.15	-3.33e-03	-1.43e-04	6.99e-05	-5.05e-04
188	11	-0.03	-0.15	4.88e-03	1.83e-05	5.28e-05	4.98e-04
188	12	0.07	0.01	-1.17e-03	-6.01e-05	9.48e-05	2.32e-04
188	13	-0.07	-0.01	2.72e-03	-6.48e-05	2.79e-05	-2.38e-04
188	14	0.07	-0.02	-1.15e-03	-6.03e-05	9.45e-05	-2.61e-04
188	15	-0.06	0.02	2.70e-03	-6.45e-05	2.82e-05	2.55e-04
188	16	-0.01	0.07	-1.18e-03	-1.00e-04	6.49e-05	2.60e-04
188	17	0.02	-0.07	2.72e-03	-2.47e-05	5.79e-05	-2.66e-04
188	18	0.02	0.07	-1.22e-03	-1.02e-04	6.56e-05	-2.38e-04
188	19	-0.01	-0.07	2.76e-03	-2.33e-05	5.71e-05	2.32e-04
188	20	2.26e-03	1.74e-03	7.72e-04	-6.24e-05	6.14e-05	-3.12e-06
188	21	2.26e-03	1.74e-03	7.72e-04	-6.24e-05	6.14e-05	-3.12e-06

188	22	2.26e-03	1.74e-03	7.72e-04	-6.24e-05	6.14e-05	-3.12e-06
189	1	0.04	0.04	-0.02	-1.23e-05	0.0	3.35e-05
189	2	2.38e-04	-1.82e-04	-7.09e-03	-1.28e-05	4.93e-06	2.23e-05
189	3	0.03	0.03	-0.01	-9.93e-06	1.18e-06	2.53e-05
189	4	0.17	0.08	-0.02	-5.32e-06	7.98e-05	5.24e-04
189	5	-0.11	-0.03	-5.36e-03	-1.45e-05	-7.74e-05	-4.74e-04
189	6	0.16	-0.04	-0.02	-6.54e-06	7.64e-05	-5.24e-04
189	7	-0.10	0.09	-5.45e-03	-1.33e-05	-7.40e-05	5.75e-04
189	8	-0.04	0.16	-0.02	-7.68e-05	-2.65e-05	5.85e-04
189	9	0.09	-0.11	-5.63e-03	5.69e-05	2.89e-05	-5.35e-04
189	10	0.08	0.16	-0.02	-7.91e-05	-2.85e-05	-4.75e-04
189	11	-0.03	-0.11	-5.49e-03	5.92e-05	3.09e-05	5.26e-04
189	12	0.09	0.05	-0.02	-7.73e-06	3.94e-05	2.59e-04
189	13	-0.04	6.19e-04	-9.21e-03	-1.21e-05	-3.71e-05	-2.09e-04
189	14	0.09	-4.32e-03	-0.02	-8.37e-06	3.75e-05	-2.33e-04
189	15	-0.03	0.05	-9.25e-03	-1.15e-05	-3.51e-05	2.83e-04
189	16	-3.33e-03	0.09	-0.02	-4.23e-05	-1.19e-05	2.88e-04
189	17	0.06	-0.04	-9.34e-03	2.25e-05	1.43e-05	-2.37e-04
189	18	0.05	0.09	-0.02	-4.34e-05	-1.32e-05	-2.10e-04
189	19	2.09e-03	-0.04	-9.28e-03	2.36e-05	1.56e-05	2.60e-04
189	20	0.03	0.03	-0.01	-9.93e-06	1.18e-06	2.53e-05
189	21	0.03	0.03	-0.01	-9.93e-06	1.18e-06	2.53e-05
189	22	0.03	0.03	-0.01	-9.93e-06	1.18e-06	2.53e-05
190	1	5.30e-03	5.76e-03	-7.56e-03	2.96e-04	-2.78e-04	-4.09e-06
190	2	1.78e-04	2.17e-04	-6.35e-03	-2.34e-06	3.94e-06	-4.27e-06
190	3	3.56e-03	3.87e-03	-5.89e-03	1.97e-04	-1.85e-04	-3.30e-06
190	4	0.11	-0.04	-3.48e-04	1.81e-04	-6.20e-05	4.88e-04
190	5	-0.11	0.05	-0.01	2.14e-04	-3.08e-04	-4.94e-04
190	6	0.12	0.05	-4.42e-04	1.83e-04	-6.31e-05	-5.35e-04
190	7	-0.11	-0.04	-0.01	2.12e-04	-3.07e-04	5.29e-04
190	8	0.05	0.12	3.42e-04	1.16e-04	-1.78e-04	5.42e-04
190	9	-0.04	-0.11	-0.01	2.79e-04	-1.92e-04	-5.49e-04
190	10	-0.04	0.12	4.72e-04	1.14e-04	-1.99e-04	-4.91e-04
190	11	0.05	-0.11	-0.01	2.81e-04	-1.71e-04	4.84e-04
190	12	0.06	-0.02	-3.19e-03	1.89e-04	-1.26e-04	2.28e-04
190	13	-0.05	0.03	-8.58e-03	2.06e-04	-2.44e-04	-2.35e-04
190	14	0.06	0.03	-3.24e-03	1.90e-04	-1.26e-04	-2.52e-04
190	15	-0.05	-0.02	-8.53e-03	2.04e-04	-2.45e-04	2.45e-04
190	16	0.03	0.06	-2.86e-03	1.58e-04	-1.82e-04	2.52e-04
190	17	-0.02	-0.05	-8.91e-03	2.37e-04	-1.88e-04	-2.59e-04
190	18	-0.02	0.06	-2.81e-03	1.57e-04	-1.91e-04	-2.32e-04
190	19	0.03	-0.05	-8.97e-03	2.38e-04	-1.79e-04	2.25e-04
190	20	3.56e-03	3.87e-03	-5.89e-03	1.97e-04	-1.85e-04	-3.30e-06
190	21	3.56e-03	3.87e-03	-5.89e-03	1.97e-04	-1.85e-04	-3.30e-06
190	22	3.56e-03	3.87e-03	-5.89e-03	1.97e-04	-1.85e-04	-3.30e-06
191	1	-0.02	-0.02	-0.02	-1.25e-03	1.25e-03	6.72e-06
191	2	-2.82e-04	-4.75e-04	-6.79e-03	5.43e-06	-4.57e-06	1.53e-05
191	3	-0.01	-0.01	-0.02	-8.30e-04	8.31e-04	6.52e-06
191	4	0.10	-0.07	-9.01e-03	-8.58e-04	8.97e-04	5.04e-04
191	5	-0.13	0.04	-0.02	-8.02e-04	7.65e-04	-4.91e-04
191	6	0.11	0.04	-9.13e-03	-8.59e-04	8.94e-04	-5.37e-04
191	7	-0.14	-0.07	-0.02	-8.01e-04	7.68e-04	5.50e-04
191	8	0.04	0.11	-8.73e-03	-8.97e-04	8.41e-04	5.63e-04
191	9	-0.07	-0.14	-0.02	-7.63e-04	8.21e-04	-5.50e-04
191	10	-0.07	0.10	-8.57e-03	-9.01e-04	8.39e-04	-4.90e-04
191	11	0.04	-0.13	-0.02	-7.59e-04	8.23e-04	5.03e-04
191	12	0.04	-0.04	-0.01	-8.44e-04	8.63e-04	2.40e-04
191	13	-0.07	0.01	-0.02	-8.16e-04	7.99e-04	-2.27e-04
191	14	0.05	0.01	-0.01	-8.44e-04	8.61e-04	-2.48e-04
191	15	-0.07	-0.04	-0.02	-8.16e-04	8.01e-04	2.61e-04
191	16	0.01	0.05	-0.01	-8.62e-04	8.36e-04	2.68e-04
191	17	-0.04	-0.07	-0.02	-7.98e-04	8.26e-04	-2.55e-04
191	18	-0.04	0.04	-0.01	-8.64e-04	8.35e-04	-2.26e-04
191	19	0.01	-0.07	-0.02	-7.96e-04	8.27e-04	2.39e-04
191	20	-0.01	-0.01	-0.02	-8.30e-04	8.31e-04	6.52e-06
191	21	-0.01	-0.01	-0.02	-8.30e-04	8.31e-04	6.52e-06
191	22	-0.01	-0.01	-0.02	-8.30e-04	8.31e-04	6.52e-06
192	1	-4.23e-03	-5.28e-03	-7.55e-03	-2.78e-04	2.96e-04	-4.05e-06
192	2	-4.30e-04	-1.75e-04	-6.36e-03	3.93e-06	-2.31e-06	5.44e-06
192	3	-2.88e-03	-3.54e-03	-5.88e-03	-1.85e-04	1.97e-04	-1.98e-06
192	4	0.12	0.04	-0.01	-1.94e-04	2.84e-04	4.83e-04
192	5	-0.12	-0.05	5.15e-04	-1.76e-04	1.11e-04	-4.87e-04
192	6	0.11	-0.06	-0.01	-1.98e-04	2.81e-04	-5.34e-04
192	7	-0.11	0.05	4.22e-04	-1.72e-04	1.13e-04	5.30e-04
192	8	-0.06	0.11	-0.01	-3.04e-04	2.14e-04	5.45e-04
192	9	0.05	-0.12	-4.70e-04	-6.63e-05	1.80e-04	-5.49e-04
192	10	0.04	0.12	-0.01	-3.09e-04	2.12e-04	-4.86e-04

192	11	-0.05	-0.12	-4.00e-04	-6.15e-05	1.83e-04	4.82e-04
192	12	0.06	0.02	-8.99e-03	-1.89e-04	2.39e-04	2.25e-04
192	13	-0.06	-0.03	-2.77e-03	-1.81e-04	1.55e-04	-2.29e-04
192	14	0.05	-0.03	-8.94e-03	-1.91e-04	2.38e-04	-2.52e-04
192	15	-0.06	0.02	-2.82e-03	-1.79e-04	1.57e-04	2.48e-04
192	16	-0.03	0.05	-8.51e-03	-2.42e-04	2.06e-04	2.56e-04
192	17	0.02	-0.06	-3.25e-03	-1.28e-04	1.89e-04	-2.60e-04
192	18	0.02	0.06	-8.53e-03	-2.45e-04	2.04e-04	-2.28e-04
192	19	-0.02	-0.06	-3.22e-03	-1.25e-04	1.90e-04	2.24e-04
192	20	-2.88e-03	-3.54e-03	-5.88e-03	-1.85e-04	1.97e-04	-1.98e-06
192	21	-2.88e-03	-3.54e-03	-5.88e-03	-1.85e-04	1.97e-04	-1.98e-06
192	22	-2.88e-03	-3.54e-03	-5.88e-03	-1.85e-04	1.97e-04	-1.98e-06
193	1	3.54e-03	2.64e-03	-0.04	8.25e-05	-9.56e-05	0.0
193	2	-1.56e-05	1.63e-05	-7.49e-03	-1.44e-05	-3.45e-06	-5.51e-06
193	3	2.36e-03	1.76e-03	-0.03	5.31e-05	-6.42e-05	0.0
193	4	0.11	0.03	-0.03	6.56e-05	-1.52e-05	5.10e-04
193	5	-0.11	-0.03	-0.02	4.06e-05	-1.13e-04	-5.10e-04
193	6	0.11	-0.03	-0.03	6.59e-05	-1.80e-05	-5.59e-04
193	7	-0.10	0.04	-0.02	4.02e-05	-1.10e-04	5.58e-04
193	8	-0.03	0.11	-0.03	4.32e-05	-1.56e-04	5.70e-04
193	9	0.04	-0.10	-0.02	6.29e-05	2.79e-05	-5.70e-04
193	10	0.03	0.11	-0.03	4.34e-05	-1.60e-04	-5.13e-04
193	11	-0.03	-0.11	-0.02	6.28e-05	3.19e-05	5.13e-04
193	12	0.06	0.01	-0.03	5.90e-05	-4.05e-05	2.40e-04
193	13	-0.05	-0.01	-0.02	4.72e-05	-8.79e-05	-2.40e-04
193	14	0.05	-0.01	-0.03	5.94e-05	-4.19e-05	-2.62e-04
193	15	-0.05	0.02	-0.02	4.68e-05	-8.65e-05	2.62e-04
193	16	-0.01	0.05	-0.03	4.82e-05	-1.09e-04	2.67e-04
193	17	0.02	-0.05	-0.02	5.79e-05	-1.97e-05	-2.67e-04
193	18	0.02	0.06	-0.03	4.85e-05	-1.11e-04	-2.41e-04
193	19	-0.01	-0.05	-0.02	5.77e-05	-1.77e-05	2.41e-04
193	20	2.36e-03	1.76e-03	-0.03	5.31e-05	-6.42e-05	0.0
193	21	2.36e-03	1.76e-03	-0.03	5.31e-05	-6.42e-05	0.0
193	22	2.36e-03	1.76e-03	-0.03	5.31e-05	-6.42e-05	0.0
194	1	-0.05	-0.01	-0.02	0.0	-1.16e-06	-4.09e-06
194	2	1.13e-03	2.06e-04	-7.09e-03	9.73e-06	-3.63e-05	0.0
194	3	-0.03	-8.40e-03	-0.01	1.50e-06	-5.61e-06	-2.65e-06
194	4	0.09	-0.08	-2.77e-03	-1.43e-05	1.23e-04	4.90e-04
194	5	-0.15	0.07	-0.02	1.73e-05	-1.34e-04	-4.95e-04
194	6	0.09	0.07	-2.96e-03	-1.20e-05	1.22e-04	-5.41e-04
194	7	-0.15	-0.08	-0.02	1.50e-05	-1.33e-04	5.36e-04
194	8	-0.02	0.14	-0.01	-7.92e-05	0.0	5.49e-04
194	9	-0.05	-0.16	-0.02	8.22e-05	-1.18e-05	-5.54e-04
194	10	-0.05	0.13	-0.01	-8.06e-05	7.07e-06	-4.96e-04
194	11	-0.01	-0.15	-0.02	8.36e-05	-1.83e-05	4.90e-04
194	12	0.03	-0.04	-7.96e-03	-6.30e-06	5.66e-05	2.29e-04
194	13	-0.09	0.03	-0.02	9.30e-06	-6.78e-05	-2.34e-04
194	14	0.03	0.03	-8.05e-03	-4.94e-06	5.64e-05	-2.55e-04
194	15	-0.09	-0.04	-0.02	7.94e-06	-6.76e-05	2.50e-04
194	16	-0.02	0.06	-0.01	-3.78e-05	-2.70e-06	2.56e-04
194	17	-0.04	-0.08	-0.01	4.08e-05	-8.52e-06	-2.61e-04
194	18	-0.04	0.06	-0.01	-3.81e-05	0.0	-2.34e-04
194	19	-0.02	-0.07	-0.01	4.11e-05	-1.17e-05	2.29e-04
194	20	-0.03	-8.40e-03	-0.01	1.50e-06	-5.61e-06	-2.65e-06
194	21	-0.03	-8.40e-03	-0.01	1.50e-06	-5.61e-06	-2.65e-06
194	22	-0.03	-8.40e-03	-0.01	1.50e-06	-5.61e-06	-2.65e-06
195	1	-0.02	-5.90e-03	-0.01	4.60e-04	-1.72e-03	-4.07e-06
195	2	6.46e-05	-7.87e-05	-7.35e-03	9.43e-06	-3.52e-05	0.0
195	3	-0.02	-3.94e-03	-9.72e-03	3.08e-04	-1.15e-03	-2.64e-06
195	4	0.12	-0.08	5.63e-04	3.19e-04	-1.12e-03	4.96e-04
195	5	-0.15	0.07	-0.02	2.97e-04	-1.18e-03	-5.01e-04
195	6	0.12	0.07	3.76e-04	3.19e-04	-1.12e-03	-5.49e-04
195	7	-0.15	-0.08	-0.02	2.98e-04	-1.18e-03	5.44e-04
195	8	7.46e-04	0.16	-6.95e-03	2.48e-04	-1.16e-03	5.56e-04
195	9	-0.03	-0.16	-0.01	3.68e-04	-1.14e-03	-5.61e-04
195	10	-0.04	0.15	-6.96e-03	2.46e-04	-1.14e-03	-5.01e-04
195	11	6.02e-03	-0.15	-0.01	3.70e-04	-1.16e-03	4.96e-04
195	12	0.05	-0.04	-4.73e-03	3.14e-04	-1.13e-03	2.31e-04
195	13	-0.08	0.03	-0.01	3.03e-04	-1.16e-03	-2.37e-04
195	14	0.05	0.03	-4.81e-03	3.13e-04	-1.14e-03	-2.59e-04
195	15	-0.08	-0.04	-0.01	3.03e-04	-1.16e-03	2.54e-04
195	16	-8.35e-03	0.08	-8.37e-03	2.79e-04	-1.15e-03	2.59e-04
195	17	-0.02	-0.08	-0.01	3.37e-04	-1.14e-03	-2.65e-04
195	18	-0.03	0.07	-8.37e-03	2.78e-04	-1.15e-03	-2.37e-04
195	19	-5.78e-03	-0.07	-0.01	3.38e-04	-1.15e-03	2.31e-04
195	20	-0.02	-3.94e-03	-9.72e-03	3.08e-04	-1.15e-03	-2.64e-06
195	21	-0.02	-3.94e-03	-9.72e-03	3.08e-04	-1.15e-03	-2.64e-06

195	22	-0.02	-3.94e-03	-9.72e-03	3.08e-04	-1.15e-03	-2.64e-06
196	1	-0.02	-0.02	-0.01	1.26e-03	-1.27e-03	-9.94e-06
196	2	-8.27e-06	-1.29e-04	-7.26e-03	5.98e-06	-1.48e-05	-3.43e-06
196	3	-0.01	-0.01	-9.60e-03	8.38e-04	-8.48e-04	-7.08e-06
196	4	0.13	-0.07	-2.08e-03	8.12e-04	-7.71e-04	4.92e-04
196	5	-0.15	0.04	-0.02	8.64e-04	-9.25e-04	-5.06e-04
196	6	0.14	0.04	-2.15e-03	8.08e-04	-7.72e-04	-5.55e-04
196	7	-0.16	-0.06	-0.02	8.68e-04	-9.24e-04	5.41e-04
196	8	0.04	0.14	-2.34e-03	7.77e-04	-8.43e-04	5.53e-04
196	9	-0.07	-0.16	-0.02	8.99e-04	-8.53e-04	-5.67e-04
196	10	-0.07	0.13	-2.22e-03	7.75e-04	-8.44e-04	-5.07e-04
196	11	0.04	-0.16	-0.02	9.01e-04	-8.53e-04	4.93e-04
196	12	0.06	-0.04	-5.95e-03	8.26e-04	-8.11e-04	2.27e-04
196	13	-0.08	0.01	-0.01	8.51e-04	-8.85e-04	-2.41e-04
196	14	0.06	0.01	-5.98e-03	8.23e-04	-8.11e-04	-2.65e-04
196	15	-0.09	-0.04	-0.01	8.53e-04	-8.85e-04	2.50e-04
196	16	0.01	0.06	-6.08e-03	8.09e-04	-8.46e-04	2.56e-04
196	17	-0.04	-0.09	-0.01	8.67e-04	-8.50e-04	-2.70e-04
196	18	-0.04	0.06	-6.02e-03	8.07e-04	-8.46e-04	-2.42e-04
196	19	0.01	-0.08	-0.01	8.69e-04	-8.50e-04	2.27e-04
196	20	-0.01	-0.01	-9.60e-03	8.38e-04	-8.48e-04	-7.08e-06
196	21	-0.01	-0.01	-9.60e-03	8.38e-04	-8.48e-04	-7.08e-06
196	22	-0.01	-0.01	-9.60e-03	8.38e-04	-8.48e-04	-7.08e-06
197	1	-2.33e-03	-2.30e-03	-0.04	-9.57e-05	8.27e-05	-9.18e-06
197	2	-5.64e-05	-1.56e-04	-7.49e-03	-3.44e-06	-1.45e-05	6.69e-06
197	3	-1.56e-03	-1.55e-03	-0.03	-6.42e-05	5.32e-05	-5.23e-06
197	4	0.10	-0.03	-0.02	3.11e-05	6.40e-05	5.02e-04
197	5	-0.11	0.03	-0.03	-1.60e-04	4.24e-05	-5.13e-04
197	6	0.11	0.03	-0.02	2.93e-05	6.33e-05	-5.66e-04
197	7	-0.11	-0.03	-0.03	-1.58e-04	4.30e-05	5.56e-04
197	8	0.03	0.11	-0.02	-1.17e-04	4.29e-05	5.66e-04
197	9	-0.03	-0.11	-0.03	-1.13e-05	6.34e-05	-5.76e-04
197	10	-0.03	0.10	-0.02	-1.20e-04	4.23e-05	-5.15e-04
197	11	0.03	-0.11	-0.03	-8.82e-06	6.41e-05	5.04e-04
197	12	0.05	-0.02	-0.02	-1.82e-05	5.85e-05	2.32e-04
197	13	-0.05	0.01	-0.03	-1.10e-04	4.79e-05	-2.43e-04
197	14	0.05	0.01	-0.02	-1.86e-05	5.79e-05	-2.70e-04
197	15	-0.05	-0.01	-0.03	-1.10e-04	4.85e-05	2.59e-04
197	16	0.01	0.05	-0.03	-9.00e-05	4.84e-05	2.63e-04
197	17	-0.01	-0.05	-0.03	-3.85e-05	5.80e-05	-2.74e-04
197	18	-0.02	0.05	-0.02	-9.08e-05	4.79e-05	-2.44e-04
197	19	0.01	-0.05	-0.03	-3.77e-05	5.85e-05	2.33e-04
197	20	-1.56e-03	-1.55e-03	-0.03	-6.42e-05	5.32e-05	-5.23e-06
197	21	-1.56e-03	-1.55e-03	-0.03	-6.42e-05	5.32e-05	-5.23e-06
197	22	-1.56e-03	-1.55e-03	-0.03	-6.42e-05	5.32e-05	-5.23e-06
198	1	5.06e-03	5.46e-03	-0.03	-2.90e-04	2.86e-04	-5.04e-06
198	2	-7.72e-05	-1.44e-04	-7.24e-03	-2.03e-06	0.0	0.0
198	3	3.36e-03	3.62e-03	-0.02	-1.94e-04	1.91e-04	-3.31e-06
198	4	0.15	-0.04	-0.01	-1.76e-04	2.54e-04	4.93e-04
198	5	-0.14	0.05	-0.03	-2.11e-04	1.28e-04	-5.00e-04
198	6	0.15	0.05	-0.01	-1.78e-04	2.53e-04	-5.46e-04
198	7	-0.15	-0.04	-0.03	-2.09e-04	1.29e-04	5.40e-04
198	8	0.05	0.15	-0.01	-2.65e-04	1.89e-04	5.52e-04
198	9	-0.04	-0.15	-0.03	-1.22e-04	1.93e-04	-5.59e-04
198	10	-0.05	0.15	-0.01	-2.67e-04	1.87e-04	-4.99e-04
198	11	0.05	-0.14	-0.03	-1.21e-04	1.95e-04	4.93e-04
198	12	0.07	-0.02	-0.02	-1.86e-04	2.21e-04	2.30e-04
198	13	-0.06	0.03	-0.02	-2.02e-04	1.60e-04	-2.36e-04
198	14	0.08	0.03	-0.02	-1.86e-04	2.21e-04	-2.58e-04
198	15	-0.07	-0.02	-0.02	-2.01e-04	1.61e-04	2.51e-04
198	16	0.03	0.08	-0.02	-2.28e-04	1.90e-04	2.57e-04
198	17	-0.02	-0.07	-0.02	-1.59e-04	1.92e-04	-2.64e-04
198	18	-0.02	0.07	-0.02	-2.29e-04	1.89e-04	-2.36e-04
198	19	0.03	-0.07	-0.02	-1.59e-04	1.93e-04	2.29e-04
198	20	3.36e-03	3.62e-03	-0.02	-1.94e-04	1.91e-04	-3.31e-06
198	21	3.36e-03	3.62e-03	-0.02	-1.94e-04	1.91e-04	-3.31e-06
198	22	3.36e-03	3.62e-03	-0.02	-1.94e-04	1.91e-04	-3.31e-06
199	1	-2.32e-03	-2.20e-03	2.65e-03	9.21e-05	-9.36e-05	-3.37e-06
199	2	-2.95e-05	-4.61e-05	-7.51e-03	0.0	0.0	0.0
199	3	-1.55e-03	-1.47e-03	7.69e-04	6.14e-05	-6.24e-05	-2.15e-06
199	4	0.14	-0.03	4.88e-03	5.32e-05	1.80e-05	4.99e-04
199	5	-0.14	0.03	-3.34e-03	6.96e-05	-1.43e-04	-5.03e-04
199	6	0.14	0.02	4.84e-03	5.21e-05	1.64e-05	-5.52e-04
199	7	-0.15	-0.03	-3.30e-03	7.07e-05	-1.41e-04	5.48e-04
199	8	0.03	0.14	4.66e-03	-4.91e-06	-6.30e-05	5.59e-04
199	9	-0.03	-0.15	-3.12e-03	1.28e-04	-6.19e-05	-5.64e-04
199	10	-0.03	0.14	4.73e-03	-7.45e-06	-6.81e-05	-5.04e-04

199	11	0.03	-0.14	-3.20e-03	1.30e-04	-5.68e-05	4.99e-04
199	12	0.07	-0.02	2.77e-03	5.74e-05	-2.35e-05	2.33e-04
199	13	-0.07	0.01	-1.23e-03	6.54e-05	-1.01e-04	-2.37e-04
199	14	0.07	0.01	2.75e-03	5.68e-05	-2.41e-05	-2.60e-04
199	15	-0.07	-0.01	-1.21e-03	6.60e-05	-1.01e-04	2.56e-04
199	16	0.01	0.07	2.66e-03	2.93e-05	-6.27e-05	2.61e-04
199	17	-0.01	-0.07	-1.12e-03	9.35e-05	-6.22e-05	-2.66e-04
199	18	-0.02	0.07	2.69e-03	2.80e-05	-6.52e-05	-2.37e-04
199	19	0.01	-0.07	-1.16e-03	9.48e-05	-5.97e-05	2.33e-04
199	20	-1.55e-03	-1.47e-03	7.69e-04	6.14e-05	-6.24e-05	-2.15e-06
199	21	-1.55e-03	-1.47e-03	7.69e-04	6.14e-05	-6.24e-05	-2.15e-06
199	22	-1.55e-03	-1.47e-03	7.69e-04	6.14e-05	-6.24e-05	-2.15e-06
200	1	-0.04	-0.04	-0.02	0.0	-1.23e-05	-4.17e-05
200	2	2.01e-04	-4.65e-04	-7.09e-03	4.93e-06	-1.28e-05	-2.11e-05
200	3	-0.03	-0.03	-0.01	1.18e-06	-9.92e-06	-3.06e-05
200	4	0.10	-0.08	-5.45e-03	3.01e-05	5.93e-05	4.68e-04
200	5	-0.15	0.03	-0.02	-2.78e-05	-7.92e-05	-5.30e-04
200	6	0.11	0.03	-5.54e-03	2.90e-05	5.82e-05	-5.78e-04
200	7	-0.16	-0.08	-0.02	-2.67e-05	-7.81e-05	5.17e-04
200	8	0.03	0.11	-5.59e-03	-7.51e-05	-1.39e-05	5.27e-04
200	9	-0.08	-0.16	-0.02	7.74e-05	-5.91e-06	-5.89e-04
200	10	-0.08	0.11	-5.44e-03	-7.66e-05	-1.70e-05	-5.31e-04
200	11	0.03	-0.16	-0.02	7.89e-05	-2.87e-06	4.70e-04
200	12	0.04	-0.05	-9.25e-03	1.49e-05	2.36e-05	2.03e-04
200	13	-0.09	2.77e-04	-0.02	-1.26e-05	-4.35e-05	-2.64e-04
200	14	0.04	-3.58e-04	-9.30e-03	1.49e-05	2.32e-05	-2.88e-04
200	15	-0.09	-0.05	-0.02	-1.25e-05	-4.31e-05	2.27e-04
200	16	6.97e-04	0.04	-9.33e-03	-3.60e-05	-1.19e-05	2.31e-04
200	17	-0.05	-0.09	-0.02	3.84e-05	-7.96e-06	-2.92e-04
200	18	-0.05	0.04	-9.26e-03	-3.62e-05	-1.32e-05	-2.65e-04
200	19	5.69e-04	-0.09	-0.02	3.86e-05	-6.61e-06	2.04e-04
200	20	-0.03	-0.03	-0.01	1.18e-06	-9.92e-06	-3.06e-05
200	21	-0.03	-0.03	-0.01	1.18e-06	-9.92e-06	-3.06e-05
200	22	-0.03	-0.03	-0.01	1.18e-06	-9.92e-06	-3.06e-05
201	1	-2.87e-04	-2.40e-04	-0.07	-8.89e-04	1.54e-03	-1.12e-05
201	2	-7.61e-05	-3.59e-05	-7.33e-03	-6.80e-06	1.54e-05	1.44e-05
201	3	-2.01e-04	-1.65e-04	-0.05	-5.93e-04	1.03e-03	-5.57e-06
201	4	0.10	-8.29e-03	-0.05	-6.24e-04	1.35e-03	5.13e-04
201	5	-0.10	7.96e-03	-0.05	-5.63e-04	7.00e-04	-5.24e-04
201	6	0.10	-1.12e-03	-0.05	-6.27e-04	1.35e-03	-5.57e-04
201	7	-0.10	7.85e-04	-0.05	-5.60e-04	7.04e-04	5.46e-04
201	8	-1.01e-03	0.10	-0.05	-6.81e-04	1.05e-03	5.65e-04
201	9	6.07e-04	-0.10	-0.05	-5.05e-04	1.00e-03	-5.77e-04
201	10	-7.03e-03	0.10	-0.05	-6.86e-04	1.06e-03	-5.07e-04
201	11	6.63e-03	-0.10	-0.05	-5.01e-04	9.92e-04	4.96e-04
201	12	0.05	-4.07e-03	-0.05	-6.08e-04	1.19e-03	2.40e-04
201	13	-0.05	3.74e-03	-0.05	-5.79e-04	8.69e-04	-2.51e-04
201	14	0.05	-6.28e-04	-0.05	-6.10e-04	1.18e-03	-2.62e-04
201	15	-0.05	2.98e-04	-0.05	-5.77e-04	8.70e-04	2.51e-04
201	16	-5.78e-04	0.05	-0.05	-6.36e-04	1.04e-03	2.64e-04
201	17	1.75e-04	-0.05	-0.05	-5.51e-04	1.02e-03	-2.75e-04
201	18	-3.49e-03	0.05	-0.05	-6.38e-04	1.04e-03	-2.40e-04
201	19	3.09e-03	-0.05	-0.05	-5.48e-04	1.01e-03	2.28e-04
201	20	-2.01e-04	-1.65e-04	-0.05	-5.93e-04	1.03e-03	-5.57e-06
201	21	-2.01e-04	-1.65e-04	-0.05	-5.93e-04	1.03e-03	-5.57e-06
201	22	-2.01e-04	-1.65e-04	-0.05	-5.93e-04	1.03e-03	-5.57e-06
202	1	1.42e-03	6.55e-04	-0.07	8.93e-04	-1.55e-03	-3.48e-06
202	2	-7.20e-05	-1.89e-05	-7.33e-03	6.37e-06	-1.01e-05	0.0
202	3	9.37e-04	4.34e-04	-0.05	5.96e-04	-1.03e-03	-2.38e-06
202	4	0.10	7.76e-03	-0.05	6.15e-04	-9.48e-04	4.92e-04
202	5	-0.10	-6.89e-03	-0.05	5.77e-04	-1.12e-03	-4.97e-04
202	6	0.10	-8.47e-03	-0.05	6.09e-04	-9.49e-04	-5.45e-04
202	7	-0.10	9.34e-03	-0.05	5.83e-04	-1.12e-03	5.40e-04
202	8	-5.44e-03	0.10	-0.05	3.78e-04	-1.06e-03	5.51e-04
202	9	7.32e-03	-0.10	-0.05	8.14e-04	-1.00e-03	-5.55e-04
202	10	-5.10e-03	0.10	-0.05	3.71e-04	-1.06e-03	-5.06e-04
202	11	6.97e-03	-0.10	-0.05	8.21e-04	-1.00e-03	5.01e-04
202	12	0.05	3.90e-03	-0.05	6.05e-04	-9.91e-04	2.30e-04
202	13	-0.05	-3.03e-03	-0.05	5.87e-04	-1.07e-03	-2.34e-04
202	14	0.05	-3.73e-03	-0.05	6.02e-04	-9.92e-04	-2.57e-04
202	15	-0.05	4.60e-03	-0.05	5.90e-04	-1.07e-03	2.52e-04
202	16	-2.05e-03	0.05	-0.05	4.90e-04	-1.05e-03	2.56e-04
202	17	3.93e-03	-0.05	-0.05	7.02e-04	-1.02e-03	-2.60e-04
202	18	-1.95e-03	0.05	-0.05	4.87e-04	-1.05e-03	-2.40e-04
202	19	3.82e-03	-0.05	-0.05	7.05e-04	-1.02e-03	2.36e-04
202	20	9.37e-04	4.34e-04	-0.05	5.96e-04	-1.03e-03	-2.38e-06
202	21	9.37e-04	4.34e-04	-0.05	5.96e-04	-1.03e-03	-2.38e-06

202	22	9.37e-04	4.34e-04	-0.05	5.96e-04	-1.03e-03	-2.38e-06
203	1	0.02	0.01	-0.02	8.79e-04	-1.52e-03	-8.83e-06
203	2	1.79e-04	1.65e-04	-6.98e-03	-5.06e-06	1.02e-05	-5.23e-06
203	3	0.02	8.59e-03	-0.02	5.86e-04	-1.01e-03	-6.59e-06
203	4	0.13	0.07	-0.03	5.80e-04	-9.35e-04	4.91e-04
203	5	-0.10	-0.06	-7.02e-03	5.91e-04	-1.09e-03	-5.04e-04
203	6	0.13	-0.07	-0.03	5.79e-04	-9.36e-04	-5.52e-04
203	7	-0.09	0.08	-7.16e-03	5.92e-04	-1.09e-03	5.38e-04
203	8	-0.03	0.13	-0.02	5.06e-04	-1.00e-03	5.51e-04
203	9	0.06	-0.12	-0.01	6.66e-04	-1.02e-03	-5.64e-04
203	10	0.05	0.14	-0.02	5.03e-04	-1.01e-03	-5.03e-04
203	11	-0.02	-0.12	-0.01	6.68e-04	-1.02e-03	4.90e-04
203	12	0.07	0.04	-0.02	5.83e-04	-9.75e-04	2.27e-04
203	13	-0.04	-0.02	-0.01	5.88e-04	-1.05e-03	-2.40e-04
203	14	0.07	-0.03	-0.02	5.83e-04	-9.75e-04	-2.62e-04
203	15	-0.04	0.04	-0.01	5.89e-04	-1.05e-03	2.49e-04
203	16	-5.44e-03	0.07	-0.02	5.47e-04	-1.01e-03	2.55e-04
203	17	0.04	-0.05	-0.01	6.24e-04	-1.02e-03	-2.68e-04
203	18	0.03	0.07	-0.02	5.46e-04	-1.01e-03	-2.39e-04
203	19	-1.25e-03	-0.06	-0.01	6.26e-04	-1.02e-03	2.26e-04
203	20	0.02	8.59e-03	-0.02	5.86e-04	-1.01e-03	-6.59e-06
203	21	0.02	8.59e-03	-0.02	5.86e-04	-1.01e-03	-6.59e-06
203	22	0.02	8.59e-03	-0.02	5.86e-04	-1.01e-03	-6.59e-06
204	1	0.02	0.01	-0.01	-8.91e-04	1.53e-03	0.0
204	2	1.28e-05	9.62e-05	-7.18e-03	-4.61e-06	0.0	2.82e-06
204	3	0.02	8.52e-03	-9.51e-03	-5.94e-04	1.02e-03	0.0
204	4	0.16	0.07	-0.02	-5.86e-04	1.09e-03	4.99e-04
204	5	-0.13	-0.06	-3.71e-04	-6.02e-04	9.51e-04	-4.99e-04
204	6	0.15	-0.07	-0.02	-5.85e-04	1.09e-03	-5.48e-04
204	7	-0.12	0.08	-5.40e-04	-6.04e-04	9.54e-04	5.47e-04
204	8	-0.03	0.16	-0.01	-6.78e-04	1.02e-03	5.59e-04
204	9	0.06	-0.14	-4.31e-03	-5.11e-04	1.02e-03	-5.59e-04
204	10	0.05	0.17	-0.01	-6.82e-04	1.03e-03	-4.99e-04
204	11	-0.02	-0.15	-4.22e-03	-5.06e-04	1.02e-03	4.99e-04
204	12	0.09	0.04	-0.01	-5.90e-04	1.06e-03	2.34e-04
204	13	-0.06	-0.02	-5.07e-03	-5.98e-04	9.87e-04	-2.34e-04
204	14	0.08	-0.03	-0.01	-5.90e-04	1.05e-03	-2.57e-04
204	15	-0.05	0.04	-5.15e-03	-5.99e-04	9.88e-04	2.57e-04
204	16	-6.10e-03	0.08	-0.01	-6.35e-04	1.02e-03	2.62e-04
204	17	0.04	-0.06	-6.98e-03	-5.54e-04	1.02e-03	-2.63e-04
204	18	0.03	0.09	-0.01	-6.37e-04	1.02e-03	-2.34e-04
204	19	-1.40e-03	-0.07	-6.94e-03	-5.52e-04	1.02e-03	2.34e-04
204	20	0.02	8.52e-03	-9.51e-03	-5.94e-04	1.02e-03	0.0
204	21	0.02	8.52e-03	-9.51e-03	-5.94e-04	1.02e-03	0.0
204	22	0.02	8.52e-03	-9.51e-03	-5.94e-04	1.02e-03	0.0
205	1	1.38e-03	6.44e-04	0.04	-8.79e-04	1.52e-03	-4.43e-06
205	2	-8.31e-05	-2.37e-05	-7.72e-03	5.00e-06	-8.77e-06	0.0
205	3	9.10e-04	4.26e-04	0.02	-5.85e-04	1.01e-03	-2.90e-06
205	4	0.14	9.63e-03	0.02	-5.90e-04	1.08e-03	4.92e-04
205	5	-0.14	-8.78e-03	0.02	-5.80e-04	9.44e-04	-4.98e-04
205	6	0.14	-9.68e-03	0.02	-5.87e-04	1.08e-03	-5.45e-04
205	7	-0.14	0.01	0.02	-5.83e-04	9.46e-04	5.39e-04
205	8	-6.62e-03	0.14	0.02	-6.48e-04	1.01e-03	5.51e-04
205	9	8.44e-03	-0.14	0.02	-5.22e-04	1.02e-03	-5.57e-04
205	10	-7.23e-03	0.15	0.02	-6.50e-04	1.01e-03	-4.97e-04
205	11	9.05e-03	-0.14	0.02	-5.20e-04	1.02e-03	4.91e-04
205	12	0.07	4.81e-03	0.02	-5.88e-04	1.05e-03	2.29e-04
205	13	-0.07	-3.96e-03	0.02	-5.83e-04	9.80e-04	-2.35e-04
205	14	0.07	-4.31e-03	0.02	-5.86e-04	1.05e-03	-2.57e-04
205	15	-0.07	5.17e-03	0.02	-5.84e-04	9.81e-04	2.52e-04
205	16	-2.62e-03	0.07	0.02	-6.16e-04	1.01e-03	2.57e-04
205	17	4.44e-03	-0.07	0.02	-5.55e-04	1.01e-03	-2.63e-04
205	18	-2.99e-03	0.07	0.02	-6.17e-04	1.01e-03	-2.35e-04
205	19	4.81e-03	-0.07	0.02	-5.54e-04	1.02e-03	2.29e-04
205	20	9.10e-04	4.26e-04	0.02	-5.85e-04	1.01e-03	-2.90e-06
205	21	9.10e-04	4.26e-04	0.02	-5.85e-04	1.01e-03	-2.90e-06
205	22	9.10e-04	4.26e-04	0.02	-5.85e-04	1.01e-03	-2.90e-06
206	1	-2.95e-04	-2.30e-04	0.04	8.78e-04	-1.52e-03	0.0
206	2	-6.83e-05	-2.85e-05	-7.72e-03	-5.42e-06	9.12e-06	1.31e-06
206	3	-2.06e-04	-1.57e-04	0.02	5.84e-04	-1.01e-03	0.0
206	4	0.14	-0.01	0.02	5.97e-04	-9.55e-04	4.96e-04
206	5	-0.14	0.01	0.02	5.72e-04	-1.07e-03	-4.97e-04
206	6	0.14	1.08e-03	0.02	5.94e-04	-9.57e-04	-5.45e-04
206	7	-0.14	-1.39e-03	0.02	5.75e-04	-1.07e-03	5.45e-04
206	8	-2.14e-03	0.14	0.02	5.13e-04	-1.01e-03	5.56e-04
206	9	1.73e-03	-0.14	0.02	6.55e-04	-1.02e-03	-5.57e-04
206	10	-9.32e-03	0.14	0.02	5.12e-04	-1.01e-03	-4.97e-04

206	11	8.91e-03	-0.14	0.02	6.57e-04	-1.02e-03	4.97e-04
206	12	0.07	-5.22e-03	0.02	5.90e-04	-9.85e-04	2.32e-04
206	13	-0.07	4.91e-03	0.02	5.79e-04	-1.04e-03	-2.33e-04
206	14	0.07	4.30e-04	0.02	5.89e-04	-9.86e-04	-2.56e-04
206	15	-0.07	-7.44e-04	0.02	5.80e-04	-1.04e-03	2.56e-04
206	16	-1.12e-03	0.07	0.02	5.50e-04	-1.01e-03	2.61e-04
206	17	7.06e-04	-0.07	0.02	6.19e-04	-1.02e-03	-2.61e-04
206	18	-4.60e-03	0.07	0.02	5.49e-04	-1.01e-03	-2.33e-04
206	19	4.19e-03	-0.07	0.02	6.19e-04	-1.01e-03	2.33e-04
206	20	-2.06e-04	-1.57e-04	0.02	5.84e-04	-1.01e-03	0.0
206	21	-2.06e-04	-1.57e-04	0.02	5.84e-04	-1.01e-03	0.0
206	22	-2.06e-04	-1.57e-04	0.02	5.84e-04	-1.01e-03	0.0
207	1	-5.15e-03	-3.71e-03	-0.03	2.03e-04	-3.55e-04	-3.79e-06
207	2	-3.03e-05	8.25e-05	-7.22e-03	0.0	-2.01e-06	0.0
207	3	-3.44e-03	-2.46e-03	-0.02	1.35e-04	-2.37e-04	-2.45e-06
207	4	0.14	0.05	-0.03	1.29e-04	-1.68e-04	4.99e-04
207	5	-0.15	-0.06	-0.01	1.41e-04	-3.05e-04	-5.04e-04
207	6	0.14	-0.07	-0.03	1.33e-04	-1.70e-04	-5.52e-04
207	7	-0.14	0.06	-0.01	1.38e-04	-3.04e-04	5.47e-04
207	8	-0.04	0.15	-0.02	7.46e-05	-2.41e-04	5.59e-04
207	9	0.04	-0.15	-0.01	1.96e-04	-2.33e-04	-5.64e-04
207	10	0.03	0.16	-0.02	7.30e-05	-2.43e-04	-5.04e-04
207	11	-0.04	-0.16	-0.01	1.97e-04	-2.31e-04	5.00e-04
207	12	0.07	0.02	-0.02	1.32e-04	-2.04e-04	2.33e-04
207	13	-0.08	-0.03	-0.02	1.38e-04	-2.70e-04	-2.38e-04
207	14	0.06	-0.03	-0.02	1.34e-04	-2.04e-04	-2.60e-04
207	15	-0.07	0.03	-0.02	1.36e-04	-2.69e-04	2.56e-04
207	16	-0.02	0.07	-0.02	1.06e-04	-2.39e-04	2.61e-04
207	17	0.02	-0.07	-0.02	1.65e-04	-2.35e-04	-2.66e-04
207	18	0.01	0.07	-0.02	1.05e-04	-2.40e-04	-2.38e-04
207	19	-0.02	-0.08	-0.02	1.65e-04	-2.34e-04	2.33e-04
207	20	-3.44e-03	-2.46e-03	-0.02	1.35e-04	-2.37e-04	-2.45e-06
207	21	-3.44e-03	-2.46e-03	-0.02	1.35e-04	-2.37e-04	-2.45e-06
207	22	-3.44e-03	-2.46e-03	-0.02	1.35e-04	-2.37e-04	-2.45e-06
208	1	3.94e-03	1.79e-03	2.67e-03	-6.58e-05	1.13e-04	-4.30e-06
208	2	-1.14e-04	5.16e-06	-7.50e-03	0.0	0.0	0.0
208	3	2.61e-03	1.19e-03	7.80e-04	-4.39e-05	7.53e-05	-2.79e-06
208	4	0.15	0.04	-4.12e-03	-4.85e-05	1.46e-04	4.94e-04
208	5	-0.14	-0.03	5.68e-03	-3.93e-05	4.27e-06	-5.00e-04
208	6	0.14	-0.04	-4.04e-03	-3.99e-05	1.45e-04	-5.48e-04
208	7	-0.14	0.04	5.60e-03	-4.79e-05	5.67e-06	5.42e-04
208	8	-0.02	0.14	-2.04e-03	-1.18e-04	7.88e-05	5.54e-04
208	9	0.03	-0.14	3.60e-03	2.99e-05	7.17e-05	-5.60e-04
208	10	0.02	0.15	-2.09e-03	-1.20e-04	8.00e-05	-5.00e-04
208	11	-0.02	-0.15	3.65e-03	3.26e-05	7.05e-05	4.94e-04
208	12	0.07	0.02	-1.60e-03	-4.61e-05	1.10e-04	2.30e-04
208	13	-0.07	-0.01	3.16e-03	-4.17e-05	4.08e-05	-2.36e-04
208	14	0.07	-0.02	-1.56e-03	-4.20e-05	1.09e-04	-2.59e-04
208	15	-0.06	0.02	3.12e-03	-4.58e-05	4.14e-05	2.53e-04
208	16	-0.01	0.07	-5.92e-04	-7.96e-05	7.70e-05	2.59e-04
208	17	0.02	-0.07	2.15e-03	-8.16e-06	7.35e-05	-2.64e-04
208	18	0.01	0.07	-6.13e-04	-8.09e-05	7.76e-05	-2.36e-04
208	19	-6.72e-03	-0.07	2.17e-03	-6.85e-06	7.29e-05	2.30e-04
208	20	2.61e-03	1.19e-03	7.80e-04	-4.39e-05	7.53e-05	-2.79e-06
208	21	2.61e-03	1.19e-03	7.80e-04	-4.39e-05	7.53e-05	-2.79e-06
208	22	2.61e-03	1.19e-03	7.80e-04	-4.39e-05	7.53e-05	-2.79e-06
209	1	0.05	0.03	-0.02	-3.58e-06	0.0	1.83e-05
209	2	8.57e-04	2.78e-04	-7.09e-03	-4.06e-06	1.77e-06	1.46e-05
209	3	0.03	0.02	-0.01	-2.92e-06	0.0	1.42e-05
209	4	0.17	0.08	-0.02	-9.84e-06	7.00e-05	5.16e-04
209	5	-0.10	-0.05	-3.68e-03	3.99e-06	-7.01e-05	-4.87e-04
209	6	0.16	-0.06	-0.02	-6.98e-06	6.85e-05	-5.38e-04
209	7	-0.09	0.09	-3.83e-03	1.13e-06	-6.86e-05	5.66e-04
209	8	-0.01	0.15	-0.02	-5.90e-05	-3.45e-06	5.77e-04
209	9	0.08	-0.12	-7.69e-03	5.32e-05	3.39e-06	-5.48e-04
209	10	0.07	0.16	-0.02	-6.00e-05	-5.80e-06	-4.89e-04
209	11	-3.96e-03	-0.13	-7.63e-03	5.41e-05	5.74e-06	5.17e-04
209	12	0.10	0.05	-0.02	-6.31e-06	3.40e-05	2.49e-04
209	13	-0.03	-0.01	-8.39e-03	0.0	-3.40e-05	-2.21e-04
209	14	0.09	-0.02	-0.02	-4.80e-06	3.33e-05	-2.45e-04
209	15	-0.03	0.05	-8.46e-03	-1.05e-06	-3.33e-05	2.73e-04
209	16	0.01	0.08	-0.02	-3.03e-05	-1.64e-06	2.78e-04
209	17	0.05	-0.05	-0.01	2.44e-05	1.58e-06	-2.50e-04
209	18	0.05	0.09	-0.02	-3.04e-05	-2.77e-06	-2.22e-04
209	19	0.02	-0.05	-0.01	2.46e-05	2.71e-06	2.50e-04
209	20	0.03	0.02	-0.01	-2.92e-06	0.0	1.42e-05
209	21	0.03	0.02	-0.01	-2.92e-06	0.0	1.42e-05

209	22	0.03	0.02	-0.01	-2.92e-06	0.0	1.42e-05
210	1	6.95e-03	4.53e-03	-6.75e-03	2.05e-04	-3.38e-04	1.30e-05
210	2	6.62e-04	3.89e-04	-5.54e-03	-6.31e-06	-1.21e-05	4.50e-06
210	3	4.72e-03	3.07e-03	-5.24e-03	1.36e-04	-2.27e-04	9.25e-06
210	4	0.11	-0.05	3.24e-04	-4.03e-05	-1.05e-04	5.25e-04
210	5	-0.10	0.06	-0.01	3.12e-04	-3.49e-04	-5.07e-04
210	6	0.11	0.06	1.77e-04	-4.24e-05	-1.08e-04	-5.74e-04
210	7	-0.10	-0.05	-0.01	3.14e-04	-3.46e-04	5.92e-04
210	8	0.04	0.13	-8.99e-04	6.11e-05	-2.08e-04	5.86e-04
210	9	-0.03	-0.12	-9.58e-03	2.10e-04	-2.46e-04	-5.68e-04
210	10	-0.03	0.12	-8.75e-04	5.45e-05	-2.08e-04	-5.09e-04
210	11	0.04	-0.11	-9.61e-03	2.17e-04	-2.46e-04	5.28e-04
210	12	0.05	-0.02	-2.53e-03	5.08e-05	-1.67e-04	2.49e-04
210	13	-0.05	0.03	-7.95e-03	2.20e-04	-2.86e-04	-2.30e-04
210	14	0.06	0.03	-2.61e-03	4.86e-05	-1.69e-04	-2.67e-04
210	15	-0.05	-0.02	-7.87e-03	2.23e-04	-2.85e-04	2.86e-04
210	16	0.02	0.06	-3.12e-03	1.00e-04	-2.17e-04	2.80e-04
210	17	-0.01	-0.06	-7.36e-03	1.71e-04	-2.36e-04	-2.62e-04
210	18	-0.01	0.06	-3.13e-03	9.58e-05	-2.18e-04	-2.34e-04
210	19	0.02	-0.05	-7.35e-03	1.76e-04	-2.36e-04	2.52e-04
210	20	4.72e-03	3.07e-03	-5.24e-03	1.36e-04	-2.27e-04	9.25e-06
210	21	4.72e-03	3.07e-03	-5.24e-03	1.36e-04	-2.27e-04	9.25e-06
210	22	4.72e-03	3.07e-03	-5.24e-03	1.36e-04	-2.27e-04	9.25e-06
211	1	-0.02	-0.01	-0.02	-8.92e-04	1.54e-03	1.16e-05
211	2	-7.66e-04	-6.35e-04	-6.51e-03	-1.44e-06	2.60e-06	2.44e-05
211	3	-0.02	-8.67e-03	-0.02	-5.95e-04	1.03e-03	1.10e-05
211	4	0.10	-0.07	-7.31e-03	-5.86e-04	1.13e-03	5.11e-04
211	5	-0.13	0.06	-0.02	-6.04e-04	9.30e-04	-4.89e-04
211	6	0.10	0.06	-7.48e-03	-6.00e-04	1.13e-03	-5.32e-04
211	7	-0.13	-0.08	-0.02	-5.90e-04	9.31e-04	5.54e-04
211	8	0.02	0.12	-0.01	-6.73e-04	1.02e-03	5.68e-04
211	9	-0.05	-0.14	-0.02	-5.17e-04	1.04e-03	-5.46e-04
211	10	-0.05	0.11	-0.01	-6.75e-04	1.02e-03	-4.85e-04
211	11	0.02	-0.13	-0.02	-5.15e-04	1.04e-03	5.07e-04
211	12	0.04	-0.04	-0.01	-5.91e-04	1.08e-03	2.46e-04
211	13	-0.07	0.02	-0.02	-6.00e-04	9.82e-04	-2.24e-04
211	14	0.04	0.02	-0.01	-5.97e-04	1.08e-03	-2.43e-04
211	15	-0.07	-0.04	-0.02	-5.93e-04	9.82e-04	2.65e-04
211	16	2.53e-03	0.06	-0.01	-6.33e-04	1.02e-03	2.73e-04
211	17	-0.03	-0.07	-0.02	-5.57e-04	1.03e-03	-2.51e-04
211	18	-0.03	0.05	-0.01	-6.34e-04	1.02e-03	-2.21e-04
211	19	2.99e-03	-0.07	-0.02	-5.56e-04	1.04e-03	2.43e-04
211	20	-0.02	-8.67e-03	-0.02	-5.95e-04	1.03e-03	1.10e-05
211	21	-0.02	-8.67e-03	-0.02	-5.95e-04	1.03e-03	1.10e-05
211	22	-0.02	-8.67e-03	-0.02	-5.95e-04	1.03e-03	1.10e-05
212	1	-5.31e-03	-3.77e-03	-7.94e-03	-1.97e-04	3.56e-04	-2.33e-06
212	2	-2.77e-04	-1.40e-05	-6.71e-03	4.03e-06	-1.26e-06	4.35e-06
212	3	-3.57e-03	-2.52e-03	-6.19e-03	-1.31e-04	2.37e-04	0.0
212	4	0.11	0.05	-0.01	-1.44e-04	3.11e-04	5.07e-04
212	5	-0.12	-0.06	1.71e-03	-1.18e-04	1.64e-04	-5.09e-04
212	6	0.10	-0.07	-0.01	-1.43e-04	3.11e-04	-5.58e-04
212	7	-0.11	0.06	1.57e-03	-1.20e-04	1.63e-04	5.56e-04
212	8	-0.04	0.12	-0.01	-1.67e-04	2.82e-04	5.67e-04
212	9	0.04	-0.12	-2.19e-03	-9.47e-05	1.93e-04	-5.69e-04
212	10	0.03	0.12	-0.01	-1.67e-04	2.84e-04	-5.15e-04
212	11	-0.04	-0.13	-2.18e-03	-9.54e-05	1.91e-04	5.13e-04
212	12	0.05	0.02	-0.01	-1.38e-04	2.73e-04	2.37e-04
212	13	-0.06	-0.03	-2.35e-03	-1.25e-04	2.02e-04	-2.39e-04
212	14	0.05	-0.03	-9.96e-03	-1.36e-04	2.73e-04	-2.62e-04
212	15	-0.05	0.03	-2.42e-03	-1.26e-04	2.01e-04	2.60e-04
212	16	-0.02	0.05	-8.14e-03	-1.49e-04	2.59e-04	2.64e-04
212	17	0.02	-0.06	-4.24e-03	-1.13e-04	2.16e-04	-2.66e-04
212	18	0.01	0.06	-8.14e-03	-1.48e-04	2.60e-04	-2.43e-04
212	19	-0.02	-0.06	-4.24e-03	-1.14e-04	2.15e-04	2.41e-04
212	20	-3.57e-03	-2.52e-03	-6.19e-03	-1.31e-04	2.37e-04	0.0
212	21	-3.57e-03	-2.52e-03	-6.19e-03	-1.31e-04	2.37e-04	0.0
212	22	-3.57e-03	-2.52e-03	-6.19e-03	-1.31e-04	2.37e-04	0.0
213	1	4.05e-03	1.81e-03	-0.04	6.07e-05	-1.13e-04	-2.18e-06
213	2	-3.36e-05	1.34e-05	-7.31e-03	-8.18e-06	0.0	-1.82e-06
213	3	2.69e-03	1.21e-03	-0.03	3.94e-05	-7.55e-05	-1.69e-06
213	4	0.11	0.04	-0.03	4.92e-05	-1.88e-05	4.87e-04
213	5	-0.10	-0.03	-0.02	2.96e-05	-1.32e-04	-4.90e-04
213	6	0.10	-0.04	-0.03	4.74e-05	-2.16e-05	-5.38e-04
213	7	-0.10	0.04	-0.02	3.13e-05	-1.29e-04	5.34e-04
213	8	-0.02	0.11	-0.03	-2.36e-05	-1.35e-04	5.48e-04
213	9	0.03	-0.11	-0.02	1.02e-04	-1.58e-05	-5.51e-04
213	10	0.02	0.11	-0.03	-2.56e-05	-1.38e-04	-4.89e-04

213	11	-0.02	-0.11	-0.02	1.04e-04	-1.26e-05	4.86e-04
213	12	0.06	0.02	-0.03	4.41e-05	-4.80e-05	2.27e-04
213	13	-0.05	-0.01	-0.02	3.47e-05	-1.03e-04	-2.31e-04
213	14	0.05	-0.02	-0.03	4.33e-05	-4.95e-05	-2.54e-04
213	15	-0.05	0.02	-0.02	3.55e-05	-1.02e-04	2.50e-04
213	16	-9.46e-03	0.05	-0.03	8.85e-06	-1.04e-04	2.57e-04
213	17	0.01	-0.05	-0.03	6.99e-05	-4.68e-05	-2.60e-04
213	18	0.01	0.06	-0.03	7.94e-06	-1.06e-04	-2.30e-04
213	19	-6.53e-03	-0.05	-0.03	7.08e-05	-4.51e-05	2.26e-04
213	20	2.69e-03	1.21e-03	-0.03	3.94e-05	-7.55e-05	-1.69e-06
213	21	2.69e-03	1.21e-03	-0.03	3.94e-05	-7.55e-05	-1.69e-06
213	22	2.69e-03	1.21e-03	-0.03	3.94e-05	-7.55e-05	-1.69e-06
214	1	-3.07e-03	-4.25e-04	-0.04	-5.57e-05	2.08e-04	-4.06e-06
214	2	-1.13e-04	-8.40e-05	-7.69e-03	7.78e-06	-2.90e-05	0.0
214	3	-2.06e-03	-2.95e-04	-0.03	-3.61e-05	1.35e-04	-2.63e-06
214	4	0.10	-0.04	-0.02	9.79e-05	-3.01e-04	5.14e-04
214	5	-0.10	0.04	-0.03	-1.70e-04	5.70e-04	-5.19e-04
214	6	0.10	0.04	-0.02	9.44e-05	-2.94e-04	-5.69e-04
214	7	-0.10	-0.04	-0.03	-1.66e-04	5.63e-04	5.64e-04
214	8	5.89e-03	0.11	-0.03	-6.71e-05	1.94e-05	5.78e-04
214	9	-0.01	-0.11	-0.03	-5.04e-06	2.50e-04	-5.84e-04
214	10	-0.01	0.11	-0.03	-7.06e-05	1.57e-05	-5.18e-04
214	11	0.01	-0.11	-0.03	-1.51e-06	2.54e-04	5.12e-04
214	12	0.05	-0.02	-0.02	2.89e-05	-7.65e-05	2.39e-04
214	13	-0.05	0.02	-0.03	-1.01e-04	3.46e-04	-2.45e-04
214	14	0.05	0.02	-0.02	2.72e-05	-7.38e-05	-2.69e-04
214	15	-0.05	-0.02	-0.03	-9.94e-05	3.43e-04	2.63e-04
214	16	1.68e-03	0.05	-0.03	-5.10e-05	7.87e-05	2.71e-04
214	17	-5.80e-03	-0.06	-0.03	-2.12e-05	1.91e-04	-2.76e-04
214	18	-8.12e-03	0.05	-0.03	-5.27e-05	7.64e-05	-2.43e-04
214	19	4.00e-03	-0.05	-0.03	-1.95e-05	1.93e-04	2.38e-04
214	20	-2.06e-03	-2.95e-04	-0.03	-3.61e-05	1.35e-04	-2.63e-06
214	21	-2.06e-03	-2.95e-04	-0.03	-3.61e-05	1.35e-04	-2.63e-06
214	22	-2.06e-03	-2.95e-04	-0.03	-3.61e-05	1.35e-04	-2.63e-06
215	1	7.07e-03	2.51e-03	-0.03	-1.11e-04	4.14e-04	-4.07e-06
215	2	-1.42e-04	-1.23e-04	-7.24e-03	-2.25e-06	8.39e-06	0.0
215	3	4.69e-03	1.66e-03	-0.02	-7.43e-05	2.77e-04	-2.64e-06
215	4	0.14	-0.06	-0.01	-8.46e-05	3.82e-04	4.94e-04
215	5	-0.13	0.07	-0.03	-6.40e-05	1.72e-04	-5.00e-04
215	6	0.14	0.07	-0.01	-8.37e-05	3.81e-04	-5.48e-04
215	7	-0.13	-0.06	-0.03	-6.49e-05	1.74e-04	5.42e-04
215	8	0.02	0.16	-0.02	-1.46e-04	2.81e-04	5.54e-04
215	9	-9.62e-03	-0.16	-0.02	-2.53e-06	2.74e-04	-5.59e-04
215	10	-0.02	0.15	-0.02	-1.48e-04	2.86e-04	-5.00e-04
215	11	0.02	-0.15	-0.02	0.0	2.68e-04	4.95e-04
215	12	0.07	-0.03	-0.01	-7.94e-05	3.28e-04	2.31e-04
215	13	-0.06	0.03	-0.02	-6.92e-05	2.26e-04	-2.36e-04
215	14	0.07	0.03	-0.02	-7.88e-05	3.28e-04	-2.58e-04
215	15	-0.06	-0.03	-0.02	-6.97e-05	2.27e-04	2.53e-04
215	16	0.01	0.08	-0.02	-1.09e-04	2.79e-04	2.59e-04
215	17	-2.02e-03	-0.08	-0.02	-3.94e-05	2.76e-04	-2.64e-04
215	18	-4.90e-03	0.07	-0.02	-1.10e-04	2.82e-04	-2.36e-04
215	19	0.01	-0.07	-0.02	-3.88e-05	2.73e-04	2.31e-04
215	20	4.69e-03	1.66e-03	-0.02	-7.43e-05	2.77e-04	-2.64e-06
215	21	4.69e-03	1.66e-03	-0.02	-7.43e-05	2.77e-04	-2.64e-06
215	22	4.69e-03	1.66e-03	-0.02	-7.43e-05	2.77e-04	-2.64e-06
216	1	-0.02	-0.01	-0.01	8.91e-04	-1.56e-03	-1.28e-05
216	2	5.21e-05	-7.70e-05	-7.33e-03	9.17e-06	-2.81e-05	-4.07e-06
216	3	-0.01	-8.17e-03	-9.69e-03	5.95e-04	-1.05e-03	-9.08e-06
216	4	0.12	-0.07	-4.70e-04	5.81e-04	-9.28e-04	4.89e-04
216	5	-0.15	0.06	-0.02	6.10e-04	-1.17e-03	-5.07e-04
216	6	0.13	0.06	-5.95e-04	5.81e-04	-9.27e-04	-5.54e-04
216	7	-0.16	-0.07	-0.02	6.10e-04	-1.17e-03	5.36e-04
216	8	0.02	0.15	-4.51e-03	5.23e-04	-1.06e-03	5.48e-04
216	9	-0.05	-0.16	-0.01	6.68e-04	-1.04e-03	-5.67e-04
216	10	-0.05	0.14	-4.46e-03	5.21e-04	-1.06e-03	-5.07e-04
216	11	0.03	-0.16	-0.01	6.70e-04	-1.03e-03	4.89e-04
216	12	0.05	-0.04	-5.21e-03	5.88e-04	-9.89e-04	2.25e-04
216	13	-0.08	0.02	-0.01	6.03e-04	-1.10e-03	-2.43e-04
216	14	0.06	0.02	-5.27e-03	5.88e-04	-9.88e-04	-2.65e-04
216	15	-0.09	-0.04	-0.01	6.03e-04	-1.10e-03	2.47e-04
216	16	2.74e-03	0.07	-7.17e-03	5.60e-04	-1.05e-03	2.53e-04
216	17	-0.03	-0.09	-0.01	6.31e-04	-1.04e-03	-2.71e-04
216	18	-0.03	0.06	-7.15e-03	5.60e-04	-1.05e-03	-2.43e-04
216	19	3.98e-03	-0.08	-0.01	6.31e-04	-1.04e-03	2.24e-04
216	20	-0.01	-8.17e-03	-9.69e-03	5.95e-04	-1.05e-03	-9.08e-06
216	21	-0.01	-8.17e-03	-9.69e-03	5.95e-04	-1.05e-03	-9.08e-06

216	22	-0.01	-8.17e-03	-9.69e-03	5.95e-04	-1.05e-03	-9.08e-06
217	1	-2.89e-03	-1.51e-03	-0.04	-6.22e-05	8.50e-05	-1.13e-05
217	2	-8.85e-05	-1.45e-04	-7.65e-03	1.61e-06	-1.65e-05	8.91e-06
217	3	-1.94e-03	-1.02e-03	-0.03	-4.13e-05	5.45e-05	-6.36e-06
217	4	0.10	-0.04	-0.02	5.84e-05	-1.05e-04	4.76e-04
217	5	-0.10	0.03	-0.03	-1.41e-04	2.14e-04	-4.88e-04
217	6	0.10	0.03	-0.02	5.69e-05	-1.05e-04	-5.37e-04
217	7	-0.11	-0.03	-0.03	-1.39e-04	2.14e-04	5.25e-04
217	8	0.02	0.11	-0.02	-9.78e-05	2.21e-05	5.34e-04
217	9	-0.02	-0.11	-0.03	1.52e-05	8.68e-05	-5.46e-04
217	10	-0.02	0.11	-0.02	-1.00e-04	1.64e-05	-4.93e-04
217	11	0.02	-0.11	-0.03	1.78e-05	9.26e-05	4.80e-04
217	12	0.05	-0.02	-0.02	6.79e-06	-2.24e-05	2.20e-04
217	13	-0.05	0.02	-0.03	-8.93e-05	1.31e-04	-2.32e-04
217	14	0.05	0.01	-0.02	6.60e-06	-2.36e-05	-2.56e-04
217	15	-0.05	-0.02	-0.03	-8.91e-05	1.33e-04	2.43e-04
217	16	6.83e-03	0.05	-0.03	-6.88e-05	3.93e-05	2.46e-04
217	17	-0.01	-0.06	-0.03	-1.37e-05	6.97e-05	-2.59e-04
217	18	-0.01	0.05	-0.03	-6.95e-05	3.57e-05	-2.35e-04
217	19	8.31e-03	-0.05	-0.03	-1.30e-05	7.33e-05	2.23e-04
217	20	-1.94e-03	-1.02e-03	-0.03	-4.13e-05	5.45e-05	-6.36e-06
217	21	-1.94e-03	-1.02e-03	-0.03	-4.13e-05	5.45e-05	-6.36e-06
217	22	-1.94e-03	-1.02e-03	-0.03	-4.13e-05	5.45e-05	-6.36e-06
218	1	6.27e-03	4.12e-03	-0.03	-2.10e-04	3.59e-04	-5.09e-06
218	2	-1.08e-04	-1.38e-04	-7.24e-03	-3.56e-06	3.80e-06	0.0
218	3	4.16e-03	2.73e-03	-0.02	-1.41e-04	2.40e-04	-3.33e-06
218	4	0.14	-0.06	-0.01	-1.25e-04	2.79e-04	4.98e-04
218	5	-0.14	0.06	-0.03	-1.56e-04	2.00e-04	-5.05e-04
218	6	0.15	0.06	-0.01	-1.27e-04	2.77e-04	-5.54e-04
218	7	-0.14	-0.05	-0.03	-1.55e-04	2.02e-04	5.47e-04
218	8	0.04	0.16	-0.01	-2.07e-04	2.50e-04	5.59e-04
218	9	-0.03	-0.15	-0.02	-7.45e-05	2.29e-04	-5.66e-04
218	10	-0.03	0.15	-0.01	-2.09e-04	2.48e-04	-5.05e-04
218	11	0.04	-0.14	-0.02	-7.25e-05	2.32e-04	4.99e-04
218	12	0.07	-0.02	-0.02	-1.33e-04	2.59e-04	2.32e-04
218	13	-0.06	0.03	-0.02	-1.48e-04	2.20e-04	-2.38e-04
218	14	0.07	0.03	-0.02	-1.34e-04	2.58e-04	-2.62e-04
218	15	-0.07	-0.02	-0.02	-1.47e-04	2.21e-04	2.55e-04
218	16	0.02	0.08	-0.02	-1.73e-04	2.45e-04	2.61e-04
218	17	-0.01	-0.07	-0.02	-1.09e-04	2.34e-04	-2.67e-04
218	18	-0.01	0.07	-0.02	-1.73e-04	2.43e-04	-2.39e-04
218	19	0.02	-0.07	-0.02	-1.08e-04	2.36e-04	2.32e-04
218	20	4.16e-03	2.73e-03	-0.02	-1.41e-04	2.40e-04	-3.33e-06
218	21	4.16e-03	2.73e-03	-0.02	-1.41e-04	2.40e-04	-3.33e-06
218	22	4.16e-03	2.73e-03	-0.02	-1.41e-04	2.40e-04	-3.33e-06
219	1	-4.27e-04	-9.80e-05	0.0	-7.14e-05	-6.57e-05	-5.64e-06
219	2	5.02e-05	2.80e-05	0.0	-1.15e-05	-1.28e-05	0.0
219	3	-2.78e-04	-6.16e-05	0.0	-4.91e-05	-4.55e-05	-3.65e-06
219	4	0.06	0.04	0.0	-2.00e-04	3.70e-04	4.44e-04
219	5	-0.06	-0.04	0.0	1.02e-04	-4.61e-04	-4.51e-04
219	6	0.07	0.05	0.0	1.39e-04	3.92e-04	5.26e-04
219	7	-0.07	-0.05	0.0	-2.37e-04	-4.83e-04	-5.33e-04
219	8	0.04	0.07	0.0	-4.71e-04	1.04e-04	4.89e-04
219	9	-0.04	-0.07	0.0	3.73e-04	-1.95e-04	-4.96e-04
219	10	0.04	0.07	0.0	-5.00e-04	-1.99e-04	4.99e-04
219	11	-0.04	-0.07	0.0	4.01e-04	1.08e-04	-5.07e-04
219	12	0.03	0.02	0.0	-1.19e-04	1.52e-04	2.02e-04
219	13	-0.03	-0.02	0.0	2.08e-05	-2.43e-04	-2.09e-04
219	14	0.03	0.02	0.0	3.98e-05	1.70e-04	2.53e-04
219	15	-0.04	-0.02	0.0	-1.38e-04	-2.61e-04	-2.61e-04
219	16	0.02	0.03	0.0	-2.48e-04	2.44e-05	2.23e-04
219	17	-0.02	-0.03	0.0	1.50e-04	-1.15e-04	-2.30e-04
219	18	0.02	0.03	0.0	-2.70e-04	-1.18e-04	2.41e-04
219	19	-0.02	-0.03	0.0	1.71e-04	2.70e-05	-2.48e-04
219	20	-2.78e-04	-6.16e-05	0.0	-4.91e-05	-4.55e-05	-3.65e-06
219	21	-2.78e-04	-6.16e-05	0.0	-4.91e-05	-4.55e-05	-3.65e-06
219	22	-2.78e-04	-6.16e-05	0.0	-4.91e-05	-4.55e-05	-3.65e-06
220	1	-4.47e-04	-1.37e-04	0.0	9.72e-05	-9.58e-06	6.00e-06
220	2	5.86e-05	1.11e-06	0.0	1.59e-05	-7.53e-06	0.0
220	3	-2.90e-04	-9.09e-05	0.0	6.69e-05	-7.39e-06	3.89e-06
220	4	0.09	-0.02	0.0	1.52e-04	5.00e-04	-5.60e-04
220	5	-0.09	0.02	0.0	-1.77e-05	-5.15e-04	5.68e-04
220	6	0.08	-0.02	0.0	1.63e-04	4.64e-04	-5.33e-04
220	7	-0.08	0.02	0.0	-2.94e-05	-4.79e-04	5.41e-04
220	8	-0.06	0.04	0.0	-3.22e-04	-2.61e-04	4.45e-04
220	9	0.06	-0.04	0.0	4.56e-04	2.46e-04	-4.37e-04
220	10	0.05	0.04	0.0	-3.45e-04	2.00e-04	3.98e-04

220	11	-0.05	-0.05	0.0	4.79e-04	-2.14e-04	-3.90e-04
220	12	0.04	-7.61e-03	0.0	1.07e-04	2.42e-04	-2.72e-04
220	13	-0.04	7.43e-03	0.0	2.64e-05	-2.56e-04	2.80e-04
220	14	0.04	-7.73e-03	0.0	1.11e-04	2.14e-04	-2.44e-04
220	15	-0.04	7.55e-03	0.0	2.25e-05	-2.29e-04	2.52e-04
220	16	-0.03	0.02	0.0	-1.19e-04	-1.27e-04	2.09e-04
220	17	0.03	-0.02	0.0	2.53e-04	1.12e-04	-2.01e-04
220	18	0.02	0.02	0.0	-1.34e-04	8.91e-05	1.91e-04
220	19	-0.02	-0.02	0.0	2.68e-04	-1.04e-04	-1.83e-04
220	20	-2.90e-04	-9.09e-05	0.0	6.69e-05	-7.39e-06	3.89e-06
220	21	-2.90e-04	-9.09e-05	0.0	6.69e-05	-7.39e-06	3.89e-06
220	22	-2.90e-04	-9.09e-05	0.0	6.69e-05	-7.39e-06	3.89e-06
221	1	4.47e-04	1.45e-04	0.0	-3.21e-05	9.56e-05	0.0
221	2	-4.74e-05	-1.36e-05	0.0	-3.15e-06	1.64e-05	0.0
221	3	2.92e-04	9.48e-05	0.0	-2.18e-05	6.59e-05	0.0
221	4	0.04	-0.05	0.0	1.88e-04	4.51e-04	3.89e-04
221	5	-0.04	0.05	0.0	-2.31e-04	-3.19e-04	-3.90e-04
221	6	0.05	0.05	0.0	-2.33e-04	4.52e-04	4.24e-04
221	7	-0.04	-0.05	0.0	1.89e-04	-3.20e-04	-4.24e-04
221	8	-0.02	0.09	0.0	-5.01e-04	1.09e-04	-5.79e-04
221	9	0.02	-0.09	0.0	4.57e-04	2.26e-05	5.78e-04
221	10	-0.02	0.08	0.0	-4.73e-04	7.12e-06	-5.17e-04
221	11	0.02	-0.08	0.0	4.29e-04	1.25e-04	5.16e-04
221	12	0.02	-0.02	0.0	7.63e-05	2.52e-04	1.80e-04
221	13	-0.02	0.02	0.0	-1.20e-04	-1.20e-04	-1.80e-04
221	14	0.02	0.02	0.0	-1.21e-04	2.55e-04	2.02e-04
221	15	-0.02	-0.02	0.0	7.78e-05	-1.23e-04	-2.03e-04
221	16	-7.47e-03	0.04	0.0	-2.57e-04	8.63e-05	-2.83e-04
221	17	8.05e-03	-0.04	0.0	2.14e-04	4.55e-05	2.83e-04
221	18	-6.99e-03	0.04	0.0	-2.34e-04	3.81e-05	-2.39e-04
221	19	7.58e-03	-0.04	0.0	1.90e-04	9.37e-05	2.38e-04
221	20	2.92e-04	9.48e-05	0.0	-2.18e-05	6.59e-05	0.0
221	21	2.92e-04	9.48e-05	0.0	-2.18e-05	6.59e-05	0.0
221	22	2.92e-04	9.48e-05	0.0	-2.18e-05	6.59e-05	0.0
222	1	1.43e-04	2.99e-05	-5.70e-03	0.0	-1.17e-06	0.0
222	2	-2.05e-05	-5.19e-06	-1.41e-03	0.0	0.0	0.0
222	3	9.25e-05	1.93e-05	-3.99e-03	0.0	0.0	0.0
222	4	0.04	2.48e-03	-4.43e-03	-1.40e-05	-1.81e-04	3.81e-04
222	5	-0.04	-2.45e-03	-3.55e-03	1.47e-05	1.80e-04	-3.81e-04
222	6	0.04	1.30e-03	-4.40e-03	-1.32e-05	-1.77e-04	-4.19e-04
222	7	-0.04	-1.26e-03	-3.58e-03	1.38e-05	1.75e-04	4.19e-04
222	8	-1.12e-03	0.04	-3.74e-03	1.85e-04	7.29e-06	4.28e-04
222	9	1.31e-03	-0.04	-4.24e-03	-1.85e-04	-8.80e-06	-4.28e-04
222	10	-2.20e-03	0.04	-4.20e-03	1.93e-04	-1.08e-05	-3.81e-04
222	11	2.39e-03	-0.04	-3.77e-03	-1.92e-04	9.32e-06	3.81e-04
222	12	0.02	1.22e-03	-4.21e-03	-6.54e-06	-8.85e-05	1.79e-04
222	13	-0.02	-1.18e-03	-3.77e-03	7.16e-06	8.69e-05	-1.79e-04
222	14	0.02	6.29e-04	-4.18e-03	-5.91e-06	-8.61e-05	-1.97e-04
222	15	-0.02	-5.91e-04	-3.80e-03	6.53e-06	8.46e-05	1.97e-04
222	16	-4.76e-04	0.02	-3.87e-03	8.99e-05	3.06e-06	2.01e-04
222	17	6.61e-04	-0.02	-4.11e-03	-8.93e-05	-4.57e-06	-2.01e-04
222	18	-1.01e-03	0.02	-4.09e-03	9.34e-05	-5.63e-06	-1.79e-04
222	19	1.20e-03	-0.02	-3.89e-03	-9.28e-05	4.11e-06	1.79e-04
222	20	9.25e-05	1.93e-05	-3.99e-03	0.0	0.0	0.0
222	21	9.25e-05	1.93e-05	-3.99e-03	0.0	0.0	0.0
222	22	9.25e-05	1.93e-05	-3.99e-03	0.0	0.0	0.0

Nodo	**Traslazione X**	**Traslazione Y**	**Traslazione Z**	**Rotazione X**	**Rotazione Y**	**Rotazione Z**
	-0.17	-0.17	-0.08	-1.80e-03	-1.80e-03	-6.02e-04
	0.17	0.17	0.04	1.78e-03	1.78e-03	6.02e-04

Nodo	**Cmb**	**Azione X**	**Azione Y**	**Azione Z**	**Azione RX**	**Azione RY**	**Azione RZ**
		daN	daN	daN	daN cm	daN cm	daN cm
219	1	0.0	0.0	-5924.72	0.0	0.0	0.0
219	2	0.0	0.0	-4592.43	0.0	0.0	0.0
219	3	0.0	0.0	-4562.14	0.0	0.0	0.0
219	4	0.0	0.0	-9515.36	0.0	0.0	0.0
219	5	0.0	0.0	391.08	0.0	0.0	0.0
219	6	0.0	0.0	-9327.77	0.0	0.0	0.0
219	7	0.0	0.0	203.50	0.0	0.0	0.0
219	8	0.0	0.0	198.30	0.0	0.0	0.0
219	9	0.0	0.0	-9322.57	0.0	0.0	0.0
219	10	0.0	0.0	417.18	0.0	0.0	0.0
219	11	0.0	0.0	-9541.45	0.0	0.0	0.0
219	12	0.0	0.0	-6959.60	0.0	0.0	0.0
219	13	0.0	0.0	-2164.68	0.0	0.0	0.0

219	14	0.0	0.0	-6873.78	0.0	0.0	0.0
219	15	0.0	0.0	-2250.49	0.0	0.0	0.0
219	16	0.0	0.0	-2257.75	0.0	0.0	0.0
219	17	0.0	0.0	-6866.52	0.0	0.0	0.0
219	18	0.0	0.0	-2158.15	0.0	0.0	0.0
219	19	0.0	0.0	-6966.12	0.0	0.0	0.0
219	20	0.0	0.0	-4562.14	0.0	0.0	0.0
219	21	0.0	0.0	-4562.14	0.0	0.0	0.0
219	22	0.0	0.0	-4562.14	0.0	0.0	0.0
220	1	0.0	0.0	-5924.63	0.0	0.0	0.0
220	2	0.0	0.0	-4592.36	0.0	0.0	0.0
220	3	0.0	0.0	-4562.07	0.0	0.0	0.0
220	4	0.0	0.0	-6390.46	0.0	0.0	0.0
220	5	0.0	0.0	-2733.68	0.0	0.0	0.0
220	6	0.0	0.0	-6401.79	0.0	0.0	0.0
220	7	0.0	0.0	-2722.34	0.0	0.0	0.0
220	8	0.0	0.0	-1.113e+04	0.0	0.0	0.0
220	9	0.0	0.0	2003.17	0.0	0.0	0.0
220	10	0.0	0.0	-1.132e+04	0.0	0.0	0.0
220	11	0.0	0.0	2191.67	0.0	0.0	0.0
220	12	0.0	0.0	-5456.41	0.0	0.0	0.0
220	13	0.0	0.0	-3667.72	0.0	0.0	0.0
220	14	0.0	0.0	-5460.17	0.0	0.0	0.0
220	15	0.0	0.0	-3663.97	0.0	0.0	0.0
220	16	0.0	0.0	-7746.46	0.0	0.0	0.0
220	17	0.0	0.0	-1377.67	0.0	0.0	0.0
220	18	0.0	0.0	-7832.21	0.0	0.0	0.0
220	19	0.0	0.0	-1291.93	0.0	0.0	0.0
220	20	0.0	0.0	-4562.07	0.0	0.0	0.0
220	21	0.0	0.0	-4562.07	0.0	0.0	0.0
220	22	0.0	0.0	-4562.07	0.0	0.0	0.0
221	1	0.0	0.0	-5924.68	0.0	0.0	0.0
221	2	0.0	0.0	-4592.35	0.0	0.0	0.0
221	3	0.0	0.0	-4562.10	0.0	0.0	0.0
221	4	0.0	0.0	2175.65	0.0	0.0	0.0
221	5	0.0	0.0	-1.130e+04	0.0	0.0	0.0
221	6	0.0	0.0	2038.78	0.0	0.0	0.0
221	7	0.0	0.0	-1.116e+04	0.0	0.0	0.0
221	8	0.0	0.0	-2744.73	0.0	0.0	0.0
221	9	0.0	0.0	-6379.47	0.0	0.0	0.0
221	10	0.0	0.0	-2739.67	0.0	0.0	0.0
221	11	0.0	0.0	-6384.53	0.0	0.0	0.0
221	12	0.0	0.0	-1291.12	0.0	0.0	0.0
221	13	0.0	0.0	-7833.08	0.0	0.0	0.0
221	14	0.0	0.0	-1354.04	0.0	0.0	0.0
221	15	0.0	0.0	-7770.16	0.0	0.0	0.0
221	16	0.0	0.0	-3676.25	0.0	0.0	0.0
221	17	0.0	0.0	-5447.95	0.0	0.0	0.0
221	18	0.0	0.0	-3672.89	0.0	0.0	0.0
221	19	0.0	0.0	-5451.32	0.0	0.0	0.0
221	20	0.0	0.0	-4562.10	0.0	0.0	0.0
221	21	0.0	0.0	-4562.10	0.0	0.0	0.0
221	22	0.0	0.0	-4562.10	0.0	0.0	0.0

Nodo	**Azione X**	**Azione Y**	**Azione Z**	**Azione RX**	**Azione RY**	**Azione RZ**
	0.0	0.0	-1.132e+04	0.0	0.0	0.0
	0.0	0.0	2191.67	0.0	0.0	0.0

Nodo	**Cmb**	**Azione X**	**Azione Y**	**Azione Z**	**Azione RX**	**Azione RY**	**Azione RZ**
		daN	daN	daN	daN cm	daN cm	daN cm
219	11	0.0	0.0	-9541.45	0.0	0.0	0.0
	10	0.0	0.0	417.18	0.0	0.0	0.0
	1	0.0	0.0	-5924.72	0.0	0.0	0.0
	1	0.0	0.0	-5924.72	0.0	0.0	0.0
	1	0.0	0.0	-5924.72	0.0	0.0	0.0
	1	0.0	0.0	-5924.72	0.0	0.0	0.0
220	10	0.0	0.0	-1.132e+04	0.0	0.0	0.0
	11	0.0	0.0	2191.67	0.0	0.0	0.0
	1	0.0	0.0	-5924.63	0.0	0.0	0.0
	1	0.0	0.0	-5924.63	0.0	0.0	0.0
	1	0.0	0.0	-5924.63	0.0	0.0	0.0
	1	0.0	0.0	-5924.63	0.0	0.0	0.0
221	5	0.0	0.0	-1.130e+04	0.0	0.0	0.0
	4	0.0	0.0	2175.65	0.0	0.0	0.0
	1	0.0	0.0	-5924.68	0.0	0.0	0.0
	1	0.0	0.0	-5924.68	0.0	0.0	0.0

1	0.0	0.0	-5924.68	0.0	0.0	0.0
1	0.0	0.0	-5924.68	0.0	0.0	0.0

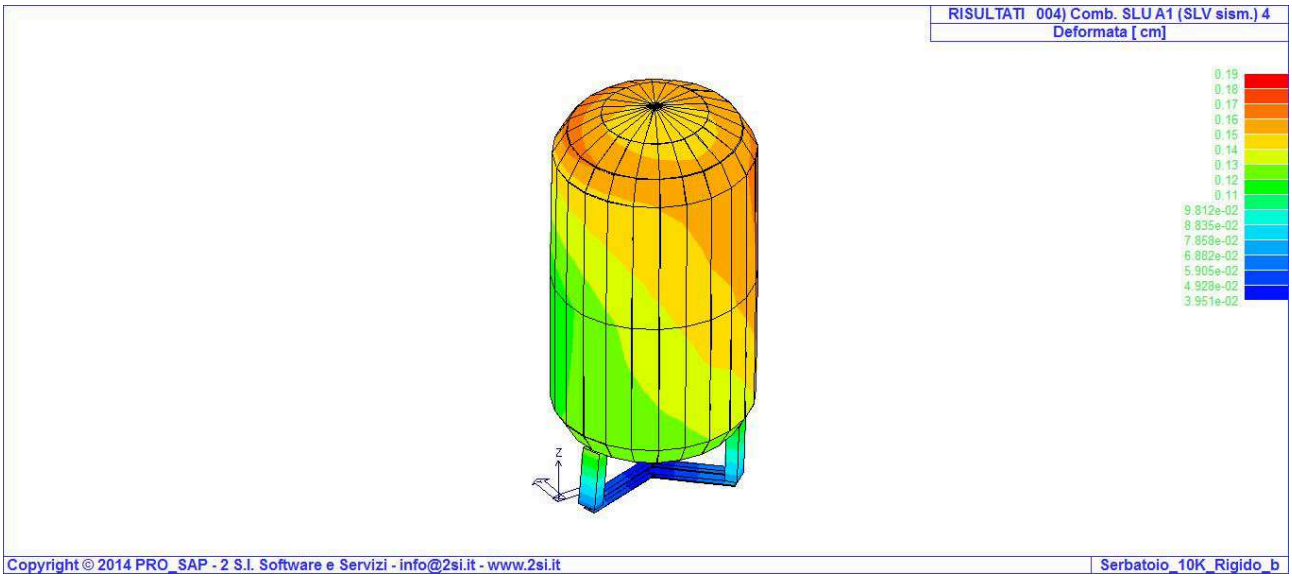

Deformata massima in Comb.4

RISULTATI OPERE DI FONDAZIONE

Il controllo dei risultati delle analisi condotte, per quanto concerne le opere di fondazione, è possibile in relazione alle tabelle sottoriportate.

Per questo tipo di fondazione vengono riportate le pressioni nei quattro vertici dell'impronta sul terreno.

In particolare viene riportato:

Nodo	numero del nodo a cui è applicato il plinto
Tipo	Codice identificativo del nome assegnato al plinto
area	area dell'impronta del plinto
Wink O **Wink V**	coefficienti di Winkler (orizzontale e verticale) adottati
Comb	Combinazione di carico in cui si verificano i valori riportati
Pt (P1 P2 P3 P4)	valori di pressione nei vertici

Vengono inoltre riportati, con funzione statistica, i valori massimo e minimo delle pressioni che compaiono nella tabella.

Elem.	Cmb	Pt ini	Pt fin	Pt max	Cmb	Pt ini	Pt fin	Pt max	Cmb	Pt ini	Pt fin	Pt max
		daN/cm2	daN/cm2	daN/cm2		daN/cm2	daN/cm2	daN/cm2		daN/cm2	daN/cm2	daN/cm2
4	1	-0.06	1.59e-03	-0.06	2	-0.01	-3.15e-04	-0.01	3	-0.04	1.02e-03	-0.04
	4	-0.06	-0.05	-0.09	5	-0.05	0.04	0.05	6	-0.06	-0.05	-0.06
	7	-0.05	0.05	-0.05	8	-0.05	-0.03	-0.13	9	-0.04	0.03	0.08
	10	-0.05	-0.02	-0.13	11	-0.04	0.02	0.08	12	-0.05	-0.02	-0.06
	13	-0.05	0.02	-0.04	14	-0.05	-0.02	-0.05	15	-0.05	0.02	-0.04
	16	-0.04	-0.01	-0.08	17	-0.04	0.01	-0.03	18	-0.04	-0.01	-0.08
	19	-0.04	8.98e-03	-0.03	20	-0.04	1.02e-03	-0.04	21	-0.04	1.02e-03	-0.04
	22	-0.04	1.02e-03	-0.04								
5	1	6.30e-04	-0.06	-0.06	2	-1.20e-04	-0.01	-0.01	3	4.04e-04	-0.04	-0.04
	4	-0.02	-0.05	-0.13	5	0.02	-0.04	0.08	6	-0.03	-0.05	-0.13
	7	0.02	-0.04	0.07	8	-0.05	-0.06	-0.07	9	0.05	-0.06	-0.06
	10	-0.04	-0.06	-0.10	11	0.04	-0.05	-0.05	12	-0.01	-0.04	-0.08
	13	0.01	-0.04	-0.04	14	-0.01	-0.04	-0.08	15	0.01	-0.04	-0.04
	16	-0.02	-0.05	-0.05	17	0.02	-0.05	-0.05	18	-0.02	-0.05	-0.06
	19	0.02	-0.05	-0.05	20	4.04e-04	-0.04	-0.04	21	4.04e-04	-0.04	-0.04

	22	4.04e-04	-0.04	-0.04								
6	1	-0.06	-4.01e-04	-0.06	2	-0.01	8.62e-05	-0.01	3	-0.04	-2.56e-04	-0.04
	4	-0.06	-0.04	-0.08	5	-0.05	0.04	-0.05	6	-0.06	-0.04	-0.10
	7	-0.05	0.04	0.06	8	-0.06	-0.04	-0.10	9	-0.05	0.04	0.06
	10	-0.06	-0.05	-0.08	11	-0.06	0.05	-0.05	12	-0.05	-0.02	-0.05
	13	-0.05	0.02	-0.04	14	-0.05	-0.02	-0.06	15	-0.04	0.02	-0.04
	16	-0.05	-0.02	-0.07	17	-0.05	0.02	-0.04	18	-0.05	-0.02	-0.05
	19	-0.05	0.02	-0.04	20	-0.04	-2.56e-04	-0.04	21	-0.04	-2.56e-04	-0.04
	22	-0.04	-2.56e-04	-0.04								

Elem.		Pt ini	Pt fin	Pt max		Pt ini	Pt fin	Pt max		Pt ini	Pt fin	Pt max
		-0.13										
		0.08										

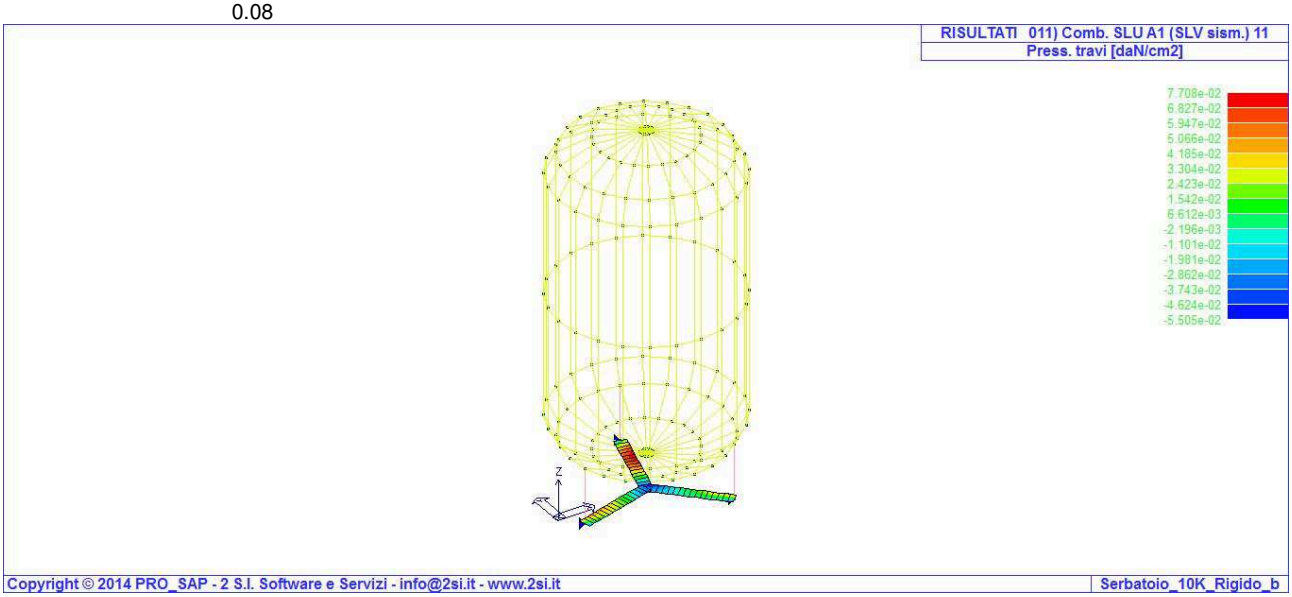

Pressione sul terreno

RISULTATI ELEMENTI TIPO TRAVE

Il controllo dei risultati delle analisi condotte, per quanto concerne gli elementi tipo trave, è possibile in relazione alle tabelle sottoriportate.

Gli elementi vengono suddivisi, in relazione alle proprietà in elementi:

- tipo **pilastro**
- tipo **trave in elevazione**
- tipo **trave in fondazione**

Per ogni elemento, e per ogni combinazione (o caso di carico) vengono riportati i risultati più significativi.

Per gli elementi tipo *pilastro* sono riportati in tabella i seguenti valori:

Pilas.	numero dell'elemento pilastro
Cmb	combinazione in cui si verificano i valori riportati
M3 mx/mn	momento flettente in campata M3 max (prima riga) / min (seconda riga)
M2 mx/mn	momento flettente in campata M2 max (prima riga) / min (seconda riga)
D2/D3	freccia massima in direzione 2 (prima riga) / direzione 3 (seconda riga)
Q2/Q3	carico totale in direzione 2 (prima riga) / direzione 3 (seconda riga)
Pos.	ascissa del punto iniziale e finale dell'elemento
N, V2, ecc..	sei componenti di sollecitazione al piede ed in sommità dell'elemento

Per gli elementi tipo *trave in elevazione* sono riportati, oltre al numero dell'elemento, i medesimi risultati visti per i pilastri.

Per gli elementi tipo *trave in fondazione* (trave f.) sono riportati, oltre al numero dell'elemento, i medesimi risultati visti per i pilastri e la massima pressione sul terreno.

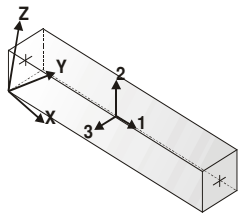

orientamento elementi 2D non verticali

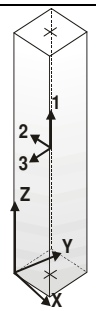

orientamento elementi 2D verticali

Pilas.	Cmb	M3 mx/mn	M2 mx/mn	D 2 / D 3	Q 2 / Q 3	Pos.	N	V 2	V 3	T	M 2	M 3
		daN cm	daN cm	cm	daN	cm	daN	daN	daN	daN cm	daN cm	daN cm
1	1	7439.33	5346.68	8.47e-03	0.0	0.0	-5916.94	-260.64	77.20	-1.04	-1987.66	7439.33
		-1.732e+04	-1987.66	-7.93e-04	0.0	95.0	-5864.23	-260.64	77.20	-1.04	5346.68	-1.732e+04
1	2	1987.95	23.44	2.08e-03	0.0	0.0	-4553.65	21.89	-6.97	0.15	23.44	-91.65
		-91.65	-638.33	-7.66e-04	0.0	95.0	-4513.10	21.89	-6.97	0.15	-638.33	1987.95
1	3	4947.33	3479.34	5.92e-03	0.0	0.0	-4551.78	-170.84	50.54	-0.68	-1321.98	4947.33
		-1.128e+04	-1321.98	-6.31e-04	0.0	95.0	-4511.23	-170.84	50.54	-0.68	3479.34	-1.128e+04
1	4	-9564.29	2721.79	-0.03	0.0	0.0	-6265.71	10.55	-1294.91	41.82	2721.79	-9564.29
		-2.339e+04	-1.211e+05	0.04	0.0	95.0	-6225.16	10.55	-1294.91	41.82	-1.211e+05	-2.339e+04
1	5	1.946e+04	1.280e+05	0.04	0.0	0.0	-2837.85	-352.23	1395.99	-43.17	-5365.75	1.946e+04
		823.35	-5365.75	-0.04	0.0	95.0	-2797.30	-352.23	1395.99	-43.17	1.280e+05	823.35
1	6	-1.073e+04	2995.28	0.01	0.0	0.0	-6269.12	81.64	-1198.14	42.33	2995.28	-1.073e+04
		-2.614e+04	-1.124e+05	0.03	0.0	95.0	-6228.57	81.64	-1198.14	42.33	-1.124e+05	-2.614e+04
1	7	2.062e+04	1.194e+05	-2.87e-03	0.0	0.0	-2834.44	-423.32	1299.22	-43.68	-5639.25	2.062e+04
		3573.59	-5639.25	-0.04	0.0	95.0	-2793.89	-423.32	1299.22	-43.68	1.194e+05	3573.59
1	8	5.114e+04	7.503e+04	-0.05	0.0	0.0	-1.059e+04	1190.60	813.91	-13.13	1.671e+04	-6.248e+04
		-6.248e+04	1.671e+04	-0.02	0.0	95.0	-1.055e+04	1190.60	813.91	-13.13	7.503e+04	5.114e+04
1	9	7.237e+04	-1.936e+04	0.06	0.0	0.0	1483.81	-1532.28	-712.83	11.78	-1.936e+04	7.237e+04
		-7.371e+04	-6.807e+04	0.02	0.0	95.0	1524.36	-1532.28	-712.83	11.78	-6.807e+04	-7.371e+04
1	10	5.469e+04	1.734e+04	-0.06	0.0	0.0	-1.076e+04	1255.25	-572.03	-13.58	1.734e+04	-6.489e+04
		-6.489e+04	-5.787e+04	0.01	0.0	95.0	-1.072e+04	1255.25	-572.03	-13.58	-5.787e+04	5.469e+04
1	11	7.478e+04	6.482e+04	0.07	0.0	0.0	1653.24	-1596.93	673.11	12.23	-1.999e+04	7.478e+04
		-7.725e+04	-1.999e+04	-0.01	0.0	95.0	1693.79	-1596.93	673.11	12.23	6.482e+04	-7.725e+04
1	12	-2099.12	643.97	-9.82e-03	0.0	0.0	-5390.44	-86.60	-610.15	19.70	643.97	-2099.12
		-1.700e+04	-5.766e+04	0.02	0.0	95.0	-5349.89	-86.60	-610.15	19.70	-5.766e+04	-1.700e+04
1	13	1.199e+04	6.462e+04	0.02	0.0	0.0	-3713.12	-255.08	711.23	-21.05	-3287.94	1.199e+04
		-5561.14	-3287.94	-0.02	0.0	95.0	-3672.57	-255.08	711.23	-21.05	6.462e+04	-5561.14
1	14	-2749.27	796.63	9.02e-03	0.0	0.0	-5389.68	-48.45	-533.72	20.40	796.63	-2749.27
		-1.819e+04	-5.067e+04	0.02	0.0	95.0	-5349.13	-48.45	-533.72	20.40	-5.067e+04	-1.819e+04
1	15	1.264e+04	5.763e+04	2.99e-03	0.0	0.0	-3713.88	-293.23	634.81	-21.75	-3440.60	1.264e+04
		-4377.48	-3440.60	-0.02	0.0	95.0	-3673.33	-293.23	634.81	-21.75	5.763e+04	-4377.48
1	16	1.860e+04	3.686e+04	-0.02	0.0	0.0	-7479.85	484.58	412.23	-6.78	7407.36	-2.768e+04
		-2.768e+04	7407.36	-9.07e-03	0.0	95.0	-7439.30	484.58	412.23	-6.78	3.686e+04	1.860e+04
1	17	3.757e+04	-1.005e+04	0.03	0.0	0.0	-1623.71	-826.26	-311.15	5.43	-1.005e+04	3.757e+04
		-4.116e+04	-2.990e+04	7.81e-03	0.0	95.0	-1583.16	-826.26	-311.15	5.43	-2.990e+04	-4.116e+04
1	18	2.087e+04	7727.02	-0.02	0.0	0.0	-7555.87	522.50	-237.98	-6.66	7727.02	-2.891e+04
		-2.891e+04	-2.544e+04	5.54e-03	0.0	95.0	-7515.32	522.50	-237.98	-6.66	-2.544e+04	2.087e+04
1	19	3.881e+04	3.240e+04	0.04	0.0	0.0	-1547.69	-864.18	339.06	5.31	-1.037e+04	3.881e+04
		-4.343e+04	-1.037e+04	-6.80e-03	0.0	95.0	-1507.14	-864.18	339.06	5.31	3.240e+04	-4.343e+04
1	20	4947.33	3479.34	5.92e-03	0.0	0.0	-4551.78	-170.84	50.54	-0.68	-1321.98	4947.33
		-1.128e+04	-1321.98	-6.31e-04	0.0	95.0	-4511.23	-170.84	50.54	-0.68	3479.34	-1.128e+04
1	21	4947.33	3479.34	5.92e-03	0.0	0.0	-4551.78	-170.84	50.54	-0.68	-1321.98	4947.33
		-1.128e+04	-1321.98	-6.31e-04	0.0	95.0	-4511.23	-170.84	50.54	-0.68	3479.34	-1.128e+04
1	22	4947.33	3479.34	5.92e-03	0.0	0.0	-4551.78	-170.84	50.54	-0.68	-1321.98	4947.33
		-1.128e+04	-1321.98	-6.31e-04	0.0	95.0	-4511.23	-170.84	50.54	-0.68	3479.34	-1.128e+04
2	1	7779.38	679.19	8.51e-03	0.0	0.0	-5917.85	-269.33	-30.31	0.20	679.19	7779.38
		-1.781e+04	-2200.12	3.52e-04	0.0	95.0	-5865.14	-269.33	-30.31	0.20	-2200.12	-1.781e+04
2	2	2040.90	274.30	2.18e-03	0.0	0.0	-4553.50	22.76	3.00	-0.03	-10.33	-121.55
		-121.55	-10.33	2.45e-04	0.0	95.0	-4512.96	22.76	3.00	-0.03	274.30	2040.90
2	3	5170.05	451.42	5.96e-03	0.0	0.0	-4552.37	-176.52	-19.81	0.13	451.42	5170.05
		-1.160e+04	-1430.18	2.67e-04	0.0	95.0	-4511.82	-176.52	-19.81	0.13	-1430.18	-1.160e+04
2	4	2.934e+04	9.196e+04	-0.02	0.0	0.0	-9114.92	790.83	999.58	-32.76	-4112.81	-4.586e+04
		-4.586e+04	-4112.81	-0.04	0.0	95.0	-9074.37	790.83	999.58	-32.76	9.196e+04	2.934e+04

2	5	5.620e+04	5015.65	0.03	0.0	0.0	10.18	-1143.87	-1039.19	33.01	5015.65	5.620e+04
		-5.254e+04	-9.482e+04	0.04	0.0	95.0	50.73	-1143.87	-1039.19	33.01	-9.482e+04	-5.254e+04
2	6	2.714e+04	1.065e+05	-0.10	0.0	0.0	-8944.74	743.88	1149.36	-30.77	-3926.60	-4.363e+04
		-4.363e+04	-3926.60	0.03	0.0	95.0	-8904.19	743.88	1149.36	-30.77	1.065e+05	2.714e+04
2	7	5.397e+04	4829.43	0.11	0.0	0.0	-160.00	-1096.92	-1188.97	31.03	4829.43	5.397e+04
		-5.034e+04	-1.093e+05	-0.03	0.0	95.0	-119.46	-1096.92	-1188.97	31.03	-1.093e+05	-5.034e+04
2	8	5.557e+04	9.174e+04	0.04	0.0	0.0	-175.77	-1204.74	928.68	-32.71	4756.15	5.557e+04
		-5.894e+04	4756.15	-0.03	0.0	95.0	-135.22	-1204.74	928.68	-32.71	9.174e+04	-5.894e+04
2	9	3.574e+04	-3853.32	-0.02	0.0	0.0	-8928.97	851.70	-968.30	32.96	-3853.32	-4.523e+04
		-4.523e+04	-9.460e+04	0.03	0.0	95.0	-8888.42	851.70	-968.30	32.96	-9.460e+04	3.574e+04
2	10	5.808e+04	9.724e+04	0.10	0.0	0.0	23.56	-1258.44	983.16	-31.51	4966.81	5.808e+04
		-6.152e+04	4966.81	0.04	0.0	95.0	64.11	-1258.44	983.16	-31.51	9.724e+04	-6.152e+04
2	11	3.832e+04	-4063.98	-0.09	0.0	0.0	-9128.30	905.40	-1022.77	31.76	-4063.98	-4.774e+04
		-4.774e+04	-1.001e+05	-0.04	0.0	95.0	-9087.76	905.40	-1022.77	31.76	-1.001e+05	3.832e+04
2	12	8304.31	4.197e+04	-4.50e-03	0.0	0.0	-6760.41	293.07	454.72	-16.01	-1759.71	-1.957e+04
		-1.957e+04	-1759.71	-0.02	0.0	95.0	-6719.86	293.07	454.72	-16.01	4.197e+04	8304.31
2	13	2.991e+04	2662.54	0.02	0.0	0.0	-2344.33	-646.11	-494.33	16.26	2662.54	2.991e+04
		-3.150e+04	-4.483e+04	0.02	0.0	95.0	-2303.79	-646.11	-494.33	16.26	-4.483e+04	-3.150e+04
2	14	7029.30	5.150e+04	-0.04	0.0	0.0	-6683.44	267.58	554.17	-14.66	-1669.05	-1.844e+04
		-1.844e+04	-1669.05	0.01	0.0	95.0	-6642.89	267.58	554.17	-14.66	5.150e+04	7029.30
2	15	2.878e+04	2571.89	0.06	0.0	0.0	-2421.30	-620.62	-593.78	14.91	2571.89	2.878e+04
		-3.023e+04	-5.436e+04	-0.01	0.0	95.0	-2380.75	-620.62	-593.78	14.91	-5.436e+04	-3.023e+04
2	16	2.950e+04	4.165e+04	0.02	0.0	0.0	-2433.31	-672.04	418.27	-15.98	2531.88	2.950e+04
		-3.437e+04	2531.88	-0.02	0.0	95.0	-2392.76	-672.04	418.27	-15.98	4.165e+04	-3.437e+04
2	17	1.117e+04	-1629.05	-8.24e-03	0.0	0.0	-6671.43	319.00	-457.88	16.23	-1629.05	-1.916e+04
		-1.916e+04	-4.451e+04	0.02	0.0	95.0	-6630.89	319.00	-457.88	16.23	-4.451e+04	1.117e+04
2	18	3.076e+04	4.683e+04	0.05	0.0	0.0	-2343.49	-700.48	470.44	-15.00	2633.19	3.076e+04
		-3.581e+04	2633.19	0.02	0.0	95.0	-2302.94	-700.48	470.44	-15.00	4.683e+04	-3.581e+04
2	19	1.261e+04	-1730.36	-0.04	0.0	0.0	-6761.26	347.44	-510.06	15.25	-1730.36	-2.042e+04
		-2.042e+04	-4.969e+04	-0.02	0.0	95.0	-6720.71	347.44	-510.06	15.25	-4.969e+04	1.261e+04
2	20	5170.05	451.42	5.96e-03	0.0	0.0	-4552.37	-176.52	-19.81	0.13	451.42	5170.05
		-1.160e+04	-1430.18	2.67e-04	0.0	95.0	-4511.82	-176.52	-19.81	0.13	-1430.18	-1.160e+04
2	21	5170.05	451.42	5.96e-03	0.0	0.0	-4552.37	-176.52	-19.81	0.13	451.42	5170.05
		-1.160e+04	-1430.18	2.67e-04	0.0	95.0	-4511.82	-176.52	-19.81	0.13	-1430.18	-1.160e+04
2	22	5170.05	451.42	5.96e-03	0.0	0.0	-4552.37	-176.52	-19.81	0.13	451.42	5170.05
		-1.160e+04	-1430.18	2.67e-04	0.0	95.0	-4511.82	-176.52	-19.81	0.13	-1430.18	-1.160e+04
3	1	8458.27	1572.49	9.12e-03	0.0	0.0	-5923.00	-282.34	24.32	-0.36	-737.90	8458.27
		-1.836e+04	-737.90	-2.29e-04	0.0	95.0	-5870.29	-282.34	24.32	-0.36	1572.49	-1.836e+04
3	2	2119.56	18.59	2.09e-03	0.0	0.0	-4552.70	24.60	-2.09	0.06	18.59	-217.15
		-217.15	-180.19	-2.64e-04	0.0	95.0	-4512.15	24.60	-2.09	0.06	-180.19	2119.56
3	3	5609.89	1024.30	6.36e-03	0.0	0.0	-4555.70	-184.94	15.93	-0.24	-489.46	5609.89
		-1.196e+04	-489.46	-1.88e-04	0.0	95.0	-4515.15	-184.94	15.93	-0.24	1024.30	-1.196e+04
3	4	7.330e+04	6.988e+04	0.06	0.0	0.0	1667.49	-1504.23	767.96	-16.81	-6448.28	7.330e+04
		-6.965e+04	-6448.28	-0.03	0.0	95.0	1708.04	-1504.23	767.96	-16.81	6.988e+04	-6.965e+04
3	5	4.573e+04	5469.36	-0.04	0.0	0.0	-1.078e+04	1134.34	-736.09	16.34	5469.36	-6.208e+04
		-6.208e+04	-6.783e+04	0.03	0.0	95.0	-1.074e+04	1134.34	-736.09	16.34	-6.783e+04	4.573e+04
3	6	7.178e+04	7.516e+04	0.06	0.0	0.0	1542.02	-1468.77	829.52	-16.30	-6327.08	7.178e+04
		-6.780e+04	-6327.08	-7.99e-03	0.0	95.0	1582.57	-1468.77	829.52	-16.30	7.516e+04	-6.780e+04
3	7	4.388e+04	5348.17	-0.05	0.0	0.0	-1.065e+04	1098.88	-797.65	15.83	5348.17	-6.056e+04
		-6.056e+04	-7.311e+04	7.63e-03	0.0	95.0	-1.061e+04	1098.88	-797.65	15.83	-7.311e+04	4.388e+04
3	8	2.505e+04	-2033.13	0.05	0.0	0.0	-2886.31	-625.58	-1247.87	42.57	-2033.13	2.505e+04
		-3.446e+04	-1.204e+05	0.02	0.0	95.0	-2845.76	-625.58	-1247.87	42.57	-1.204e+05	-3.446e+04
3	9	1.054e+04	1.224e+05	-0.04	0.0	0.0	-6225.08	255.69	1279.73	-43.04	1054.21	-1.383e+04
		-1.383e+04	1054.21	-0.02	0.0	95.0	-6184.54	255.69	1279.73	-43.04	1.224e+05	1.054e+04
3	10	2.488e+04	-2039.73	0.02	0.0	0.0	-2880.20	-612.55	-1158.52	45.10	-2039.73	2.488e+04
		-3.344e+04	-1.117e+05	0.03	0.0	95.0	-2839.65	-612.55	-1158.52	45.10	-1.117e+05	-3.344e+04
3	11	9523.08	1.138e+05	-2.65e-03	0.0	0.0	-6231.19	242.66	1190.39	-45.57	1060.81	-1.366e+04
		-1.366e+04	1060.81	-0.03	0.0	95.0	-6190.65	242.66	1190.39	-45.57	1.138e+05	9523.08
3	12	3.848e+04	3.277e+04	0.03	0.0	0.0	-1534.61	-826.50	362.49	-8.32	-3381.56	3.848e+04
		-4.005e+04	-3381.56	-0.02	0.0	95.0	-1494.06	-826.50	362.49	-8.32	3.277e+04	-4.005e+04
3	13	1.614e+04	2402.64	-0.02	0.0	0.0	-7576.78	456.61	-330.63	7.85	2402.64	-2.727e+04
		-2.727e+04	-3.072e+04	0.02	0.0	95.0	-7536.23	456.61	-330.63	7.85	-3.072e+04	1.614e+04
3	14	3.775e+04	3.688e+04	0.03	0.0	0.0	-1592.03	-807.49	410.84	-7.69	-3326.30	3.775e+04
		-3.899e+04	-3326.30	-4.39e-03	0.0	95.0	-1551.48	-807.49	410.84	-7.69	3.688e+04	-3.899e+04
3	15	1.507e+04	2347.38	-0.02	0.0	0.0	-7519.36	437.61	-378.97	7.21	2347.38	-2.653e+04
		-2.653e+04	-3.483e+04	4.03e-03	0.0	95.0	-7478.81	437.61	-378.97	7.21	-3.483e+04	1.507e+04
3	16	1.510e+04	-1241.71	0.03	0.0	0.0	-3742.05	-400.53	-605.16	20.21	-1241.71	1.510e+04
		-2.299e+04	-5.865e+04	0.01	0.0	95.0	-3701.50	-400.53	-605.16	20.21	-5.865e+04	-2.299e+04
3	17	-933.40	6.070e+04	-0.01	0.0	0.0	-5369.34	30.64	637.03	-20.68	262.79	-3878.45
		-3878.45	262.79	-0.01	0.0	95.0	-5328.79	30.64	637.03	-20.68	6.070e+04	-933.40
3	18	1.499e+04	-1246.25	0.01	0.0	0.0	-3738.04	-392.06	-532.78	21.86	-1246.25	1.499e+04
		-2.231e+04	-5.169e+04	0.02	0.0	95.0	-3697.49	-392.06	-532.78	21.86	-5.169e+04	-2.231e+04
3	19	-1604.75	5.374e+04	2.26e-03	0.0	0.0	-5373.36	22.17	564.65	-22.33	267.33	-3770.06
		-3770.06	267.33	-0.02	0.0	95.0	-5332.81	22.17	564.65	-22.33	5.374e+04	-1604.75
3	20	5609.89	1024.30	6.36e-03	0.0	0.0	-4555.70	-184.94	15.93	-0.24	-489.46	5609.89
		-1.196e+04	-489.46	-1.88e-04	0.0	95.0	-4515.15	-184.94	15.93	-0.24	1024.30	-1.196e+04
3	21	5609.89	1024.30	6.36e-03	0.0	0.0	-4555.70	-184.94	15.93	-0.24	-489.46	5609.89

		-1.196e+04	-489.46	-1.88e-04	0.0	95.0	-4515.15	-184.94	15.93	-0.24	1024.30	-1.196e+04
3	22	5609.89	1024.30	6.36e-03	0.0	0.0	-4555.70	-184.94	15.93	-0.24	-489.46	5609.89
		-1.196e+04	-489.46	-1.88e-04	0.0	95.0	-4515.15	-184.94	15.93	-0.24	1024.30	-1.196e+04

Pilas.	M3 mx/mn	M2 mx/mn	D 2 / D 3	Q 2 / Q 3	N	V 2	V 3	T
	-7.725e+04	-1.211e+05	-0.10	0.0	-1.078e+04	-1596.93	-1294.91	-45.57
	7.478e+04	1.280e+05	0.11	0.0	1708.04	1255.25	1395.99	45.10

Trave f.	Cmb	M3 mx/mn	M2 mx/mn	D 2 / D 3	Pt	Pos.	N	V 2	V 3	T	M 2	M 3
		daN cm	daN cm	cm	daN/cm2	cm	daN	daN	daN	daN cm	daN cm	daN cm
4	1	7700.27	1.12	-5.70e-03	-0.06	0.0	-269.84	-1.97	1.97	1.14	-257.61	4376.11
		4376.11	-257.61	-5.27e-04		131.2	-269.84	28.30	1.97	5.46	1.12	7700.27
4	2	1495.63	36.58	1.41e-03	-0.01	0.0	22.87	0.33	-0.28	-0.21	36.58	1495.63
		-94.59	-0.15	7.48e-05		131.2	22.87	-30.96	-0.28	-1.08	-0.15	-94.59
4	3	5120.90	0.73	-3.99e-03	-0.04	0.0	-176.84	-1.27	1.28	0.73	-166.86	3116.82
		3116.82	-166.86	-3.41e-04		131.2	-176.84	14.74	1.28	3.49	0.73	5120.90
4	4	4.326e+04	1.627e+04	-5.76e-03	-0.09	0.0	97.65	254.67	-124.27	-71.17	1.627e+04	3416.37
		3416.37	-41.91	0.05		131.2	97.65	351.79	-124.27	-157.44	-41.91	4.326e+04
4	5	2817.28	43.36	5.07e-03	-0.05	0.0	-451.34	-257.22	126.83	72.64	-1.660e+04	2817.28
		-3.302e+04	-1.660e+04	-0.05		131.2	-451.34	-322.31	126.83	164.43	43.36	-3.302e+04
4	6	2.139e+04	1.582e+04	4.40e-03	-0.06	0.0	92.18	109.32	-120.87	-78.89	1.582e+04	3388.35
		3388.35	-42.44	0.05		131.2	92.18	158.50	-120.87	-164.88	-42.44	2.139e+04
4	7	2845.30	43.89	-3.58e-03	-0.05	0.0	-445.87	-111.86	123.43	80.36	-1.616e+04	2845.30
		-1.115e+04	-1.616e+04	-0.05		131.2	-445.87	-129.02	123.43	171.87	43.89	-1.115e+04
4	8	7.493e+04	12.69	-0.01	-0.13	0.0	682.65	458.12	29.48	-24.46	-3860.01	3293.12
		3293.12	-3860.01	-0.05		131.2	682.65	631.48	29.48	-90.35	12.69	7.493e+04
4	9	2940.53	3526.29	9.47e-03	0.08	0.0	-1036.34	-460.66	-26.92	25.92	3526.29	2940.53
		-6.468e+04	-11.24	0.05		131.2	-1036.34	-602.00	-26.92	97.34	-11.24	-6.468e+04
4	10	7.739e+04	13.17	-0.01	-0.13	0.0	703.23	476.15	32.57	-15.71	-4264.78	3319.14
		3319.14	-4264.78	0.05		131.2	703.23	653.32	32.57	-70.47	13.17	7.739e+04
4	11	2914.50	3931.05	9.41e-03	0.08	0.0	-1056.92	-478.69	-30.02	17.18	3931.05	2914.50
		-6.715e+04	-11.72	-0.05		131.2	-1056.92	-623.84	-30.02	77.46	-11.72	-6.715e+04
4	12	2.356e+04	7801.39	4.21e-03	-0.06	0.0	-42.28	122.57	-59.59	-34.43	7801.39	3263.93
		3263.93	-19.72	0.03		131.2	-42.28	177.72	-59.59	-75.62	-19.72	2.356e+04
4	13	2969.71	21.17	-3.79e-03	-0.05	0.0	-311.41	-125.11	62.14	35.90	-8135.12	2969.71
		-1.332e+04	-8135.12	-0.03		131.2	-311.41	-148.24	62.14	82.61	21.17	-1.332e+04
4	14	1.311e+04	7596.72	4.18e-03	-0.05	0.0	-46.09	52.98	-58.03	-37.53	7596.72	3244.11
		3244.11	-20.43	0.02		131.2	-46.09	85.32	-58.03	-75.59	-20.43	1.311e+04
4	15	2989.53	21.88	-3.80e-03	-0.05	0.0	-307.60	-55.52	60.59	39.00	-7930.44	2989.53
		-2865.72	-7930.44	-0.02		131.2	-307.60	-55.84	60.59	82.58	21.88	-2865.72
4	16	3.890e+04	6.59	-5.72e-03	-0.08	0.0	240.55	221.10	14.85	-10.96	-1943.95	3201.81
		3201.81	-1943.95	-0.03		131.2	240.55	313.15	14.85	-39.85	6.59	3.890e+04
4	17	3031.84	1610.23	5.14e-03	-0.04	0.0	-594.24	-223.64	-12.29	12.43	1610.23	3031.84
		-2.865e+04	-5.13	0.02		131.2	-594.24	-283.67	-12.29	46.84	-5.13	-2.865e+04
4	18	4.016e+04	6.49	-5.74e-03	-0.08	0.0	248.78	230.14	16.28	-7.00	-2132.08	3211.17
		3211.17	-2132.08	0.02		131.2	248.78	324.36	16.28	-30.63	6.49	4.016e+04
4	19	3022.47	1798.36	5.08e-03	-0.04	0.0	-602.47	-232.69	-13.73	8.46	1798.36	3022.47
		-2.992e+04	-5.04	-0.02		131.2	-602.47	-294.88	-13.73	37.62	-5.04	-2.992e+04
4	20	5120.90	0.73	-3.99e-03	-0.04	0.0	-176.84	-1.27	1.28	0.73	-166.86	3116.82
		3116.82	-166.86	-3.41e-04		131.2	-176.84	14.74	1.28	3.49	0.73	5120.90
4	21	5120.90	0.73	-3.99e-03	-0.04	0.0	-176.84	-1.27	1.28	0.73	-166.86	3116.82
		3116.82	-166.86	-3.41e-04		131.2	-176.84	14.74	1.28	3.49	0.73	5120.90
4	22	5120.90	0.73	-3.99e-03	-0.04	0.0	-176.84	-1.27	1.28	0.73	-166.86	3116.82
		3116.82	-166.86	-3.41e-04		131.2	-176.84	14.74	1.28	3.49	0.73	5120.90
5	1	8490.41	-0.28	5.70e-03	-0.06	0.0	-278.63	-35.29	-0.12	2.15	-0.28	8490.41
		4374.53	-15.97	3.24e-05		131.2	-278.63	-3.23	-0.12	0.37	-15.97	4374.53
5	2	1495.91	0.59	-1.41e-03	-0.01	0.0	24.18	32.05	4.10e-03	-0.41	0.05	-217.94
		-217.94	0.05	-1.18e-06		131.2	24.18	0.48	4.10e-03	-0.07	0.59	1495.91
5	3	5631.21	-0.18	3.99e-03	-0.04	0.0	-182.53	-19.25	-0.08	1.38	-0.18	5631.21
		3115.81	-10.57	2.14e-05		131.2	-182.53	-2.09	-0.08	0.24	-10.57	3115.81
5	4	7.632e+04	4973.05	-0.01	-0.13	0.0	-1025.48	605.29	38.00	-74.79	-16.20	7.632e+04
		3307.99	-16.20	-0.05		131.2	-1025.48	458.29	38.00	-12.89	4973.05	3307.99
5	5	2923.63	15.83	9.16e-03	0.08	0.0	660.42	-643.79	-38.16	77.55	15.83	-6.506e+04
		-6.506e+04	-4994.19	0.05		131.2	660.42	-462.48	-38.16	13.37	-4994.19	2923.63
5	6	7.206e+04	4567.85	-9.63e-03	-0.13	0.0	-1009.85	567.63	34.90	-85.10	-15.79	7.206e+04
		3314.92	-15.79	0.05		131.2	-1009.85	430.53	34.90	-24.08	4567.85	3314.92
5	7	2916.69	15.42	8.64e-03	0.07	0.0	644.79	-606.13	-35.06	87.85	15.42	-6.080e+04
		-6.080e+04	-4588.99	-0.05		131.2	644.79	-434.71	-35.06	24.55	-4588.99	2916.69
5	8	2.517e+04	42.80	-4.45e-03	-0.07	0.0	-390.52	153.39	-120.40	-165.85	42.80	2.517e+04
		3272.53	-1.576e+04	0.05		131.2	-390.52	126.08	-120.40	-81.34	-1.576e+04	3272.53
5	9	2959.09	1.574e+04	4.24e-03	-0.06	0.0	25.47	-191.89	120.24	168.60	-43.16	-1.391e+04
		-1.391e+04	-43.16	-0.05		131.2	25.47	-130.27	120.24	81.81	1.574e+04	2959.09
5	10	5.177e+04	45.34	-7.14e-03	-0.10	0.0	-394.70	388.36	-124.99	-135.57	45.34	5.177e+04
		3242.85	-1.636e+04	0.05		131.2	-394.70	300.03	-124.99	-66.64	-1.636e+04	3242.85
5	11	2988.76	1.634e+04	6.22e-03	-0.05	0.0	29.64	-426.86	124.83	138.33	-45.70	-4.050e+04
		-4.050e+04	-45.70	-0.05		131.2	29.64	-304.21	124.83	67.12	1.634e+04	2988.76

5	12	3.995e+04	2393.70	-5.83e-03	-0.08	0.0	-591.42	283.96	18.29	-34.39	-7.99	3.995e+04
		3209.77	-7.99	-0.02		131.2	-591.42	221.36	18.29	-5.99	2393.70	3209.77
5	13	3021.85	7.63	4.91e-03	-0.04	0.0	226.36	-322.47	-18.45	37.15	7.63	-2.869e+04
		-2.869e+04	-2414.84	0.02		131.2	226.36	-225.54	-18.45	6.46	-2414.84	3021.85
5	14	3.789e+04	2192.63	-5.60e-03	-0.08	0.0	-584.82	265.76	16.75	-40.57	-7.41	3.789e+04
		3207.87	-7.41	0.02		131.2	-584.82	208.09	16.75	-11.71	2192.63	3207.87
5	15	3023.75	7.05	4.73e-03	-0.04	0.0	219.76	-304.26	-16.91	43.33	7.05	-2.663e+04
		-2.663e+04	-2213.77	-0.02		131.2	219.76	-212.27	-16.91	12.18	-2213.77	3023.75
5	16	1.517e+04	20.35	-4.11e-03	-0.05	0.0	-283.68	65.01	-58.32	-80.86	20.35	1.517e+04
		3188.55	-7634.74	0.03		131.2	-283.68	60.39	-58.32	-39.51	-7634.74	3188.55
5	17	3043.07	7613.60	4.11e-03	-0.05	0.0	-81.38	-103.51	58.17	83.61	-20.71	-3905.46
		-3905.46	-20.71	-0.03		131.2	-81.38	-64.58	58.17	39.99	7613.60	3043.07
5	18	2.799e+04	22.00	-4.59e-03	-0.06	0.0	-286.34	178.26	-60.52	-62.70	22.00	2.799e+04
		3174.66	-7920.62	0.02		131.2	-286.34	144.36	-60.52	-31.88	-7920.62	3174.66
5	19	3056.96	7899.48	4.00e-03	-0.05	0.0	-78.72	-216.76	60.36	65.45	-22.37	-1.672e+04
		-1.672e+04	-22.37	-0.02		131.2	-78.72	-148.54	60.36	32.35	7899.48	3056.96
5	20	5631.21	-0.18	3.99e-03	-0.04	0.0	-182.53	-19.25	-0.08	1.38	-0.18	5631.21
		3115.81	-10.57	2.14e-05		131.2	-182.53	-2.09	-0.08	0.24	-10.57	3115.81
5	21	5631.21	-0.18	3.99e-03	-0.04	0.0	-182.53	-19.25	-0.08	1.38	-0.18	5631.21
		3115.81	-10.57	2.14e-05		131.2	-182.53	-2.09	-0.08	0.24	-10.57	3115.81
5	22	5631.21	-0.18	3.99e-03	-0.04	0.0	-182.53	-19.25	-0.08	1.38	-0.18	5631.21
		3115.81	-10.57	2.14e-05		131.2	-182.53	-2.09	-0.08	0.24	-10.57	3115.81
6	1	7809.04	241.64	5.70e-03	-0.06	0.0	-269.26	-1.26	-1.84	-0.60	241.64	4375.88
		4375.88	-0.20	4.94e-04		131.2	-269.26	29.26	-1.84	-1.42	-0.20	7809.04
6	2	1495.63	0.03	-1.41e-03	-0.01	0.0	22.85	0.15	0.27	0.11	-35.99	1495.63
		-121.96	-35.99	-7.35e-05		131.2	22.85	-31.20	0.27	0.30	0.03	-121.96
6	3	5189.77	156.29	-3.99e-03	-0.04	0.0	-176.46	-0.82	-1.19	-0.38	156.29	3116.67
		3116.67	-0.13	3.19e-04		131.2	-176.46	15.35	-1.19	-0.91	-0.13	5189.77
6	4	3.594e+04	32.76	-4.95e-03	-0.08	0.0	485.52	206.54	87.22	-74.26	-1.142e+04	3409.32
		3409.32	-1.142e+04	-0.04		131.2	485.52	287.09	87.22	-150.70	32.76	3.594e+04
6	5	2824.02	1.173e+04	4.32e-03	-0.05	0.0	-838.45	-208.18	-89.60	73.49	1.173e+04	2824.02
		-2.556e+04	-33.01	0.04		131.2	-838.45	-256.39	-89.60	148.89	-33.01	-2.556e+04
6	6	5.418e+04	30.77	-7.06e-03	-0.10	0.0	459.12	326.62	86.62	-59.35	-1.134e+04	3426.70
		3426.70	-1.134e+04	-0.05		131.2	459.12	448.29	86.62	-141.30	30.77	5.418e+04
6	7	2806.63	1.165e+04	6.32e-03	0.06	0.0	-812.04	-328.26	-89.00	58.58	1.165e+04	2806.63
		-4.380e+04	-31.03	0.05		131.2	-812.04	-417.60	-89.00	139.49	-31.03	-4.380e+04
6	8	5.574e+04	32.71	-7.74e-03	-0.10	0.0	-784.02	332.19	91.10	-60.06	-1.193e+04	3289.35
		3289.35	-1.193e+04	-0.05		131.2	-784.02	461.97	91.10	-127.02	32.71	5.574e+04
6	9	2943.98	1.224e+04	7.09e-03	0.06	0.0	431.10	-333.82	-93.49	59.29	1.224e+04	2943.98
		-4.536e+04	-32.96	0.05		131.2	431.10	-431.28	-93.49	125.21	-32.96	-4.536e+04
6	10	3.262e+04	31.51	-5.05e-03	-0.08	0.0	-814.14	177.83	93.41	-81.40	-1.223e+04	3246.07
		3246.07	-1.223e+04	-0.05		131.2	-814.14	257.63	93.41	-165.61	31.51	3.262e+04
6	11	2987.27	1.254e+04	4.28e-03	-0.06	0.0	461.21	-179.47	-95.79	80.63	1.254e+04	2987.27
		-2.224e+04	-31.76	0.05		131.2	461.21	-226.94	-95.79	163.79	-31.76	-2.224e+04
6	12	2.016e+04	16.01	4.21e-03	-0.05	0.0	144.22	100.19	41.76	-35.94	-5465.01	3260.55
		3260.55	-5465.01	-0.02		131.2	144.22	147.63	41.76	-71.46	16.01	2.016e+04
6	13	2972.79	5777.60	-3.79e-03	-0.05	0.0	-497.15	-101.83	-44.14	35.17	5777.60	2972.79
		-9778.85	-16.26	0.02		131.2	-497.15	-116.94	-44.14	69.65	-16.26	-9778.85
6	14	2.889e+04	14.66	-4.48e-03	-0.06	0.0	131.42	157.50	41.57	-29.31	-5441.85	3262.39
		3262.39	-5441.85	-0.03		131.2	131.42	224.79	41.57	-69.92	14.66	2.889e+04
6	15	2970.95	5754.43	3.99e-03	-0.04	0.0	-484.35	-159.14	-43.95	28.55	5754.43	2970.95
		-1.851e+04	-14.91	0.03		131.2	-484.35	-194.10	-43.95	68.11	-14.91	-1.851e+04
6	16	2.960e+04	15.98	-4.76e-03	-0.07	0.0	-470.10	159.87	43.57	-28.99	-5702.28	3196.29
		3196.29	-5702.28	-0.02		131.2	-470.10	230.99	43.57	-59.60	15.98	2.960e+04
6	17	3037.04	6014.86	4.34e-03	-0.05	0.0	117.18	-161.51	-45.95	28.22	6014.86	3037.04
		-1.922e+04	-16.23	0.02		131.2	117.18	-200.30	-45.95	57.79	-16.23	-1.922e+04
6	18	1.846e+04	15.00	-4.09e-03	-0.05	0.0	-484.54	85.68	44.72	-39.85	-5854.17	3176.42
		3176.42	-5854.17	-0.03		131.2	-484.54	132.56	44.72	-81.55	15.00	1.846e+04
6	19	3056.91	6166.75	3.89e-03	-0.05	0.0	131.61	-87.32	-47.10	39.08	6166.75	3056.91
		-8077.67	-15.25	0.03		131.2	131.61	-101.86	-47.10	79.73	-15.25	-8077.67
6	20	5189.77	156.29	-3.99e-03	-0.04	0.0	-176.46	-0.82	-1.19	-0.38	156.29	3116.67
		3116.67	-0.13	3.19e-04		131.2	-176.46	15.35	-1.19	-0.91	-0.13	5189.77
6	21	5189.77	156.29	-3.99e-03	-0.04	0.0	-176.46	-0.82	-1.19	-0.38	156.29	3116.67
		3116.67	-0.13	3.19e-04		131.2	-176.46	15.35	-1.19	-0.91	-0.13	5189.77
6	22	5189.77	156.29	-3.99e-03	-0.04	0.0	-176.46	-0.82	-1.19	-0.38	156.29	3116.67
		3116.67	-0.13	3.19e-04		131.2	-176.46	15.35	-1.19	-0.91	-0.13	5189.77

Trave f.	**M3 mx/mn**	**M2 mx/mn**	**D 2 / D 3**	**Pt**	**N**	**V 2**	**V 3**	**T**
	-6.715e+04	-1.660e+04	-0.05	-0.13	-1056.92	-643.79	-124.99	-165.85
	7.739e+04	1.634e+04	0.05	0.08	703.23	653.32	126.83	171.87

VERIFICHE PER ELEMENTI IN ACCIAIO

Il programma consente la verifica dei seguenti tipi di elementi:

1. **aste** 2. **travi** 3. **pilastri**

L'esito delle verifiche è espresso con un codice come di seguito indicato

Ok: verifica con esito positivo

NV: verifica con esito negativo

Nr: verifica non richiesta.

Per comodità gli elementi vengono raggruppati in tabelle in relazione al tipo.

Ai fini delle verifiche (come da D.M. 14 Gennaio 2008 e circ. 2 Febbraio 2009 n.617) i tipi elementi differiscono per i seguenti aspetti:

Verifica		**Aste**	**Travi**	**Pilastri**
4.2.3.1	Classificazione	X	X	X
4.2.4.1.2	Trazione, Compressione	X	X	X
	Taglio, Torsione		X	X
	Flessione,taglio e forza assiale		X	X
4.2.4.1.3.1	Aste compresse	X	X	X
4.2.4.1.3.2	Instabilità flesso-torsionale		X	X
4.2.4.1.3.3	Membrature inflesse e compresse		X	X

Ai fini delle verifiche per strutture dissipative (come da D.M. 14 Gennaio 2008 e circ. 2 Febbraio 2009 n.617 per strutture intelaiate e a controventi concentrici) si considerano le verifiche del capitolo 4 con azioni amplificate e le verifiche del capitolo 7:

Verifica		**Travi**	**Pilastri**
4.2.4.1.2	Trazione, Compressione	X	X
	Taglio, Torsione		X
	Flessione,taglio e forza assiale	X	X
4.2.4.1.3.1	Aste compresse	X	X
4.2.4.1.3.2	Instabilità flesso-torsionale		X
7.5.3	Sfruttamento per momento	X	
7.5.4	Sfruttamento per sforzo normale	X	
7.5.5	Sfruttamento per taglio da capacità flessionale	X	
7.5.9	Sfruttamento per taglio amplificato		X

Trave	**Stato**	**Note**	**V V/T**	**V N/M**	**V stab**	**Classe**	**B22xL**	**B33xL**	**Snellezza**	**Chi mn**	**V flst**	**B11xL**	**Chi LT**	**Rif. cmb**
							cm					cm		
4	ok	s=2,m=11	0.02	0.08	0.06	3	131.2	131.2	26.3	0.95				10,10,11,0
5	ok	s=2,m=11	0.02	0.08	0.07	3	131.2	131.2	26.3	0.95				5,4,4,0
6	ok	s=2,m=11	0.02	0.06	0.07	3	131.2	131.2	26.3	0.95				8,8,8,0

Trave	**V V/T**	**V N/M**	**V stab**	**B22xL**	**B33xL**	**Snellezza**	**Chi mn**	**V flst**	**B11xL**	**Chi LT**
							0.95			
	0.02	0.08	0.07	131.24		26.34				

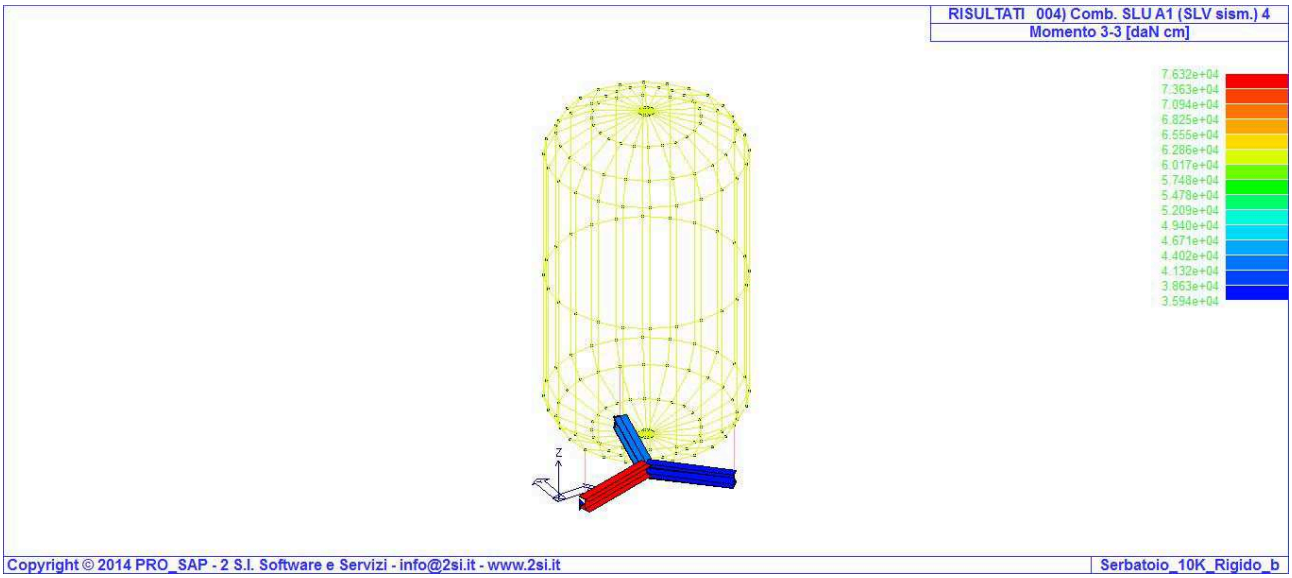

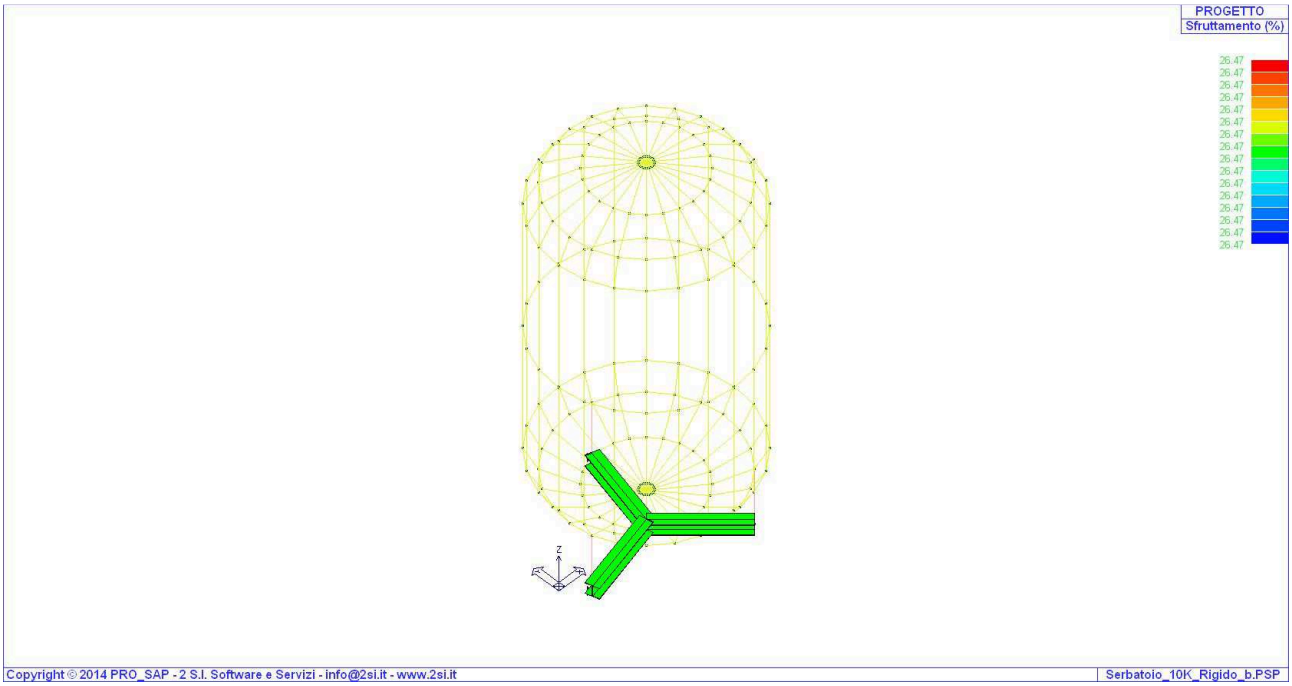

09. Verifica della piastra di collegamento tra i profili

Rilevando la massima sollecitazione agente nelle diverse combinazioni di carico sull'intersezione dei profilati, si verifica l'unione delle piastre, scomponendo il momento come coppia di forze agenti tra piastre.

Sollecitazioni	
N (N)	36500
$T_{//}$ (N)	6440
$T_{\perp\perp}$ (N)	0
M (Nmm)	0

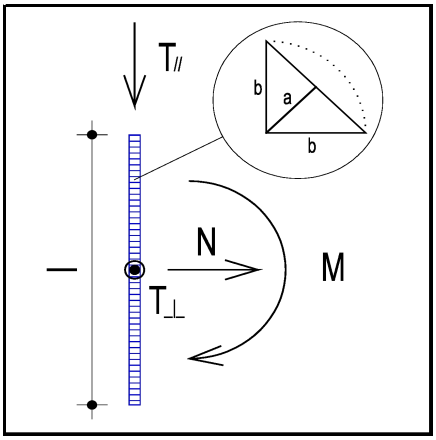

Dati saldatura	
Acciaio	S275
b (mm)	1
l (mm)	150
n° cordoni	2
γ_{M2}	1,25
a (mm)	0,71

f_{yk} (N/mm^2)	275
f_{tk} (N/mm^2)	430

Verifica con formula 4.2.76

$F_{w,Ed}/F_{w,Rd} \leq 1$ con $F_{w,Rd} = a \cdot f_{tk}/(\sqrt{3} \cdot \beta \cdot \gamma_{M2})$

β_w	0,85
$f_{vw,d}$ (N/mm^2)	233,657
$F_{T//}$ (N/mm)	21,467
$F_{T\perp\perp}$ (N/mm)	0,000

$F_{T\,TOT}$ (N/mm)	21,467
$F_{\perp\perp\,N}$ (N/mm)	121,667
$F_{\perp\perp\,M}$ (N/mm)	0,000
$F_{\perp\perp\,TOT}$ (N/mm)	121,667

$F_{w,Ed}$ (N/mm)	123,546
$F_{w,Rd}$ (N/mm)	165,220

S/R	OK
0,748	

Verifica con formula 4.2.78 e 4.2.79

$\sqrt{(n_{\perp\perp}^2 + t_{\perp\perp}^2 + t_{//}^2)} \leq \beta_1 . f_{yk}$

$|n_{\perp\perp}|+|t_{\perp\perp}| \leq \beta_2 . f_{yk}$

β_1	0,7
β_2	0,85
$t_{//}$ (N/mm^2)	30,3585
$t_{\perp\perp}$ (N/mm^2)	0,0000

$n_{\perp\perp\,N}$ (N/mm^2)	172,0627
$n_{\perp\perp\,M}$ (N/mm^2)	0,0000
$n_{\perp\perp}$ (N/mm^2)	172,0627

$\sqrt{(n_{\perp\perp}^2 + t_{\perp\perp}^2 + t_{//}^2)}$	174,7203
$\beta_1 . f_{yk}$	192,5000

S/R	OK
0,91	

$|n_{\perp\perp}|+|t_{\perp\perp}|$	172,0627
$\beta_2 . f_{yk}$	233,7500

S/R	OK
0,74	

Acciaio	f_{yk} (N/mm^2)	f_{tk} (N/mm^2)	β_w	β_1	β_2
S235	235	360	0,8	0,85	1
S275	275	430	0,85	0,7	0,85
S355	355	510	0,9	0,7	0,85
S450	440	550			
S235 N/NL	275	390			
S355 N/NL	355	490	0,9		
S420 N/NL	420	520	1	0,62	0,75
S460 N/NL	460	540	1	0,62	0,75
S235 M/ML	275	370			
S355 M/ML	355	470	0,9		
S420 M/ML	420	520	1		
S460 M/ML	460	540	1		
S235 W	235	360	0,8		
S355 W	355	510	0,9		

10. Conclusioni

L'installazione del serbatoio da 10.000 lt su un sistema di profilati metallici HE200A risulta pertanto ammissibile in siti di egual zonizzazione sismica e terreno, previo l'ancoraggio del sistema di fondazione con tasselli o barre al magrone/getto esistente e che rimarranno annegati nel getto di completamento successivo di 23 cm. Detto basamento consentirà di contrastare le pur modeste pressioni positive che si manifestano in caso di sisma, sui profilati metallici.

Genova, lì 03/10/2014

Ing. Davide Barilli